Manual of Practice for Water, Sewer, Residential Streets and Storm Drainage

Construction Standards

and

Specifications

for

Baldwin City, Kansas

adopted by Baldwin City Governing Body

April 18, 1994

LARKIN ASSOCIATES
CONSULTING ENGINEERS, INC.
9233 Ward Parkway, Suite 300
Kansas City, Missouri 64114
Telephone - 816/361-0440
FAX - 816/361-0045
LA No. 93002.01

MANUAL OF PRACTICE FOR WATER MAINS, SEWER MAINS,

RESIDENTIAL STREETS AND STORM DRAINAGE

REVISION HISTORY

SECTION	PAGES	DATE
II-D, Septic Tank Systems	4 - 6	1/95
II-D, Septic Tank Systems	Cover	1/95

MANUAL OF PRACTICE FOR WATER MAINS, SEWER MAINS,

RESIDENTIAL STREETS AND STORM DRAINAGE

TABLE OF CONTENTS

I. INTRODUCTION

II. DETAILED SPECIFICATIONS - WATER AND SEWER MAINS

A. GENERAL
1010 Clearing and Grubbing
1020 Trenching, Backfilling, and Compaction
1030 Bored Excavation
1040 Cast-in-Place Concrete
1050 Street Repair and Driveway Repair
1060 Seeding, Fertilizing, and Mulching

B. WATER MAINS
2010 Ductile Iron Pressure Pipe
2020 Polyethylene Encasement for Ductile Iron and Cast Iron Pipe
2030 Polyvinyl Chloride Pressure Pipe
2040 Valves, Hydrants, and Accessories
2050 Pressure and Leakage Tests
2060 Disinfecting Water Mains

C. SEWER MAINS
3010 Sewer Pipe
3020 Manholes and Special Structures

D. SEPTIC TANK SYSTEMS

III. CONSTRUCTION STANDARDS - WATER AND SEWER MAINS

A. Construction Standards for Water Main Extensions and Relocations

B. Construction Standards for Sewer Main Extensions and Relocations

IV. STREET DESIGN STANDARDS

V. STORM DRAINAGE DESIGN STANDARDS

I. INTRODUCTION

I. INTRODUCTION

The purpose of this manual is to provide the City of Baldwin City with guidelines, or a Manual of Practice describing construction standards and specifications for water and sewer main extensions and relocations. Also included is a section relating to street design and storm drainage standards.

Section II, Detailed Specifications - Water and Sewer Mains, is divided into three Parts. Part A contains general specifications applicable to both water and sewer main extensions. Specifications contained in Part B relate to water mains and water main apparatus. Part C specifications describe sewer mains and related structures.

Section III, Construction Standards - Water and Sewer Mains are divided into two parts. Part A consists of construction standards for water main extensions and relocations. An index of drawings is included on page 1 of this part. Part B consists of construction standards for sewer main extensions and relocations.

Section IV, Street Design Standards, consists of definitions and standard criteria for design of streets in the City of Baldwin City. Technical data and drawings presented in this section were adapted from criteria prepared by the Kansas City Metropolitan Chapter of the American Public Works Association.

Section V, Storm Drainage Design Standards, consists of definitions and standard criteria for design of storm water drainage in the City of Baldwin City. Technical data presented in this section was adapted from criteria prepared by the Kansas City Metropolitan Chapter of the American Public Works Association.

II. DETAILED SPECIFICATIONS - WATER AND SEWER MAINS

A. GENERAL

PART 1 - GENERAL

1.01 SECTION INCLUDES

A. Removal of trees, stumps, vegetation and unusable material

B. Clearing and grubbing.

1.02 RELATED SECTIONS

A. Section 01020: Trenching, Backfilling, and Compaction

1.03 SUPERVISION AND QUALITY

A. This work shall comply with all codes governing and all insurance requirements. Work shall be undertaken only when the construction superintendent is present and supervising the work.

PART 2 - PRODUCTS

NOT SPECIFICALLY REQUIRED.

PART 3 - EXECUTION

3.01 GENERAL

A. Clear and grub trees, stumps, vegetation, debris, rubbish, and designated improvements from site.

B. Protect trees, landscaping, site improvements, and other items not scheduled for clearing, or that might be damaged by construction activities.

C. Strip topsoil and stockpile at approved location on-site.

D. Provide temporary erosion and dust control.

E. Do not disturb benchmarks or monuments.

3.02 PREPARATION

A. Notification:
Notify the Owner and secure approval at least 3 days prior to beginning work.

B. Investigation:
1. Investigate the site and locate all objects to be removed or protected.
2. Locate all existing utility and pipe lines and determine the status of each.
3. Relocate all existing piping that must remain in service but conflicts with new construction.

C. Plans:
Plans may not show all existing or exact location of utilities or pipelines.

D. Removal of debris:
Remove all debris and dispose of away from the site.

E. The Engineer will designate all trees, shrubs, and plants within the construction limits that are to remain. All other vegetation within the construction limits shall be removed and disposed of properly.

3.03 CLEARING

A. Prevent damage to existing improvements indicated to remain, including improvements on and off site. Protect existing trees and vegetation indicated to remain. Do not stockpile materials within drip line of trees. Provide and maintain temporary guards to encircle trees or groups of trees; obtain approval before beginning work.

B. Water vegetation as required to maintain health. Cover temporarily exposed roots with wet burlap and backfill as soon as possible. Coat cut plant surface with approved emulsified asphalt plant coating.

C. Repair or replace vegetation which has been damaged. Remove heavy growths of grass before stripping. Stockpile satisfactory topsoil without stones, foreign matter and weeds in location directed.

D. Completely remove all improvements including stumps and debris except for those indicated to remain. Remove below grade improvements at least 12 inches below finish grade and to the extent necessary to not interfere with new construction. Remove abandoned mechanical and electrical work.

E. Prevent erosion and siltation of streets, catch basins, and piping. Control windblown dust. Remove waste materials and unsatisfactory topsoil from site and dispose of in a legal manner.

3.04 BLASTING

A. Blasting will not be allowed.

3.05 GRUBBING

A. Grubbing shall consist of the removal of all stumps, roots, buried logs, foundations, drainage structures, abandoned water wells and other objectionable materials below the ground surface.

1. Limits of grubbing:
The area to be grubbed shall include all areas within the construction site limits.

2. Materials:
All tap roots, lateral roots or other projections over 2 inches in diameter shall be removed to a depth of 2 feet below the natural ground surface. Grubbing of Osage Orange or Locust hedge shall include removal of roots.

3. Filling of holes:
All holes caused by grubbing operations shall be backfilled and compacted to the level of the surrounding ground surface.

4. Disposal:
Products of grubbing shall be disposed of away from the site.

3.06 BURNING

A. When burning is permissible under controlling air pollution regulations, all burning of products of clearing and grubbing shall be done under the care of a competent watchman at such times and in such manner that neither vegetation on adjacent property nor that designated to remain will be jeopardized. The burial of stumps and debris will not be permitted. Fire control equipment shall be on site and easily accessible.

3.07 CLEARING

A. The Contractor shall scalp all areas where excavation or embankment is to be made. Scalping shall include the removal of material such as sod, grass residue of agricultural crops, sawdust, and decayed vegetable matter from the surface of the ground without removing more earth than is necessary. The products of scalping shall be disposed of away from the project site. All such disposal shall be at the Contractor's sole expense.

3.08 REMOVAL

A. Pavements, abandoned sewers, pipe lines, or other obstructions to the project construction within the construction limits or street right-of-way not designated or permitted to remain, shall be removed and disposed of by the Contractor away from the site of the work.

B. In removing pavement, curb, curb and gutter, gutters, sidewalk, and other similar improvements, and where a portion of such improvements are to be left in place, they shall be removed to an existing joint or to a joint sawed to a minimum depth of 1 inch with a true line and vertical face. Sufficient removal shall be made to provide for proper grade and connections in the new work regardless of any limits which may be indicated on the plans.

C. All sewers, drainage pipes, and floor drains which have been or are to be abandoned shall be permanently sealed at the ends with bulkheads constructed of concrete or brick masonry, having a minimum thickness of 8 inches. "End" location to be determined by the Public Works Director. The use of salvaged brick will be permitted for construction bulkheads provided the brick are clean and sound.

END OF SECTION

PART 1 - GENERAL

1.01 SECTION INCLUDES

A. Trenching and Trench Backfilling.

B. Pipe embedment.

1.02 RELATED SECTIONS

A. Section 01010: Clearing and Grubbing

B. Section 01020: Trenching, Backfilling, and Compaction

C. Section 01030: Bored Excavation

D. Section 02010: Ductile Iron Pressure Pipe

E. Section 02030: Polyvinyl Chloride Pressure Pipe

F. Section 03010: Sewer Pipe

1.03 QUALITY ASSURANCE

A. Testing laboratory:
   1. Soil compaction testing and other required testing will be performed by a testing laboratory selected by the Owner.
   2. Frequency of testing and location of tests shall be determined by the Owner's representative and testing laboratory personnel to assure compliance with specification requirements.

B. Standards: (Tests shall comply with the latest revisions)
   1. ASTM C136, Sieve or Screen Analysis of Fine and Coarse Aggregates.
   2. ASTM D2922, Density of Soil in Place and Soil Aggregate in Place by Nuclear Methods.
   3. ASTM D2167, Density of Soil in Place by the Rubber Balloon Method.
   4. ASTM D698, Moisture Density Relations of Soils and Soil-Aggregate Mixtures Using a 5.5 lb. Rammer and 18 in. Drop.
   5. ASTM D2487, Classification of Soils for Engineering Purposes.

C. Compliance:
   Contractor shall correct all deficiencies disclosed by test results promptly upon being notified of deficiencies.

PART 2 - PRODUCTS

2.01 FILL AND PIPE EMBEDMENT MATERIAL

A. Embedment material:

1. Water lines - material shall consist of natural sand. Sand shall be washed clean and be free of organic impurities.

2. Sewer lines -

a. Class A bedding:
Material shall be 3000 psi concrete under pipe for bedding and angular rock fill to top of pipe. Angular material shall be same gradation as Class B bedding.

b. Class B bedding:
Material shall be clean river gravel or sound crushed limestone, free of cementitious, shaly or flat and flaky particles in an amount which would cause the material to cake or pack or otherwise form an unyielding support for the pipe. Gradation shall be:

3/4" square mesh sieve -	90 - 100% passing
3/8" square mesh sieve -	20 - 55% passing
No. 4 square mesh sieve -	0 - 10% passing
No. 9 square mesh sieve -	0 - 5% passing

Where bedding rock is not required, bedding material shall be same as fill material

B. Fill material:
Backfill material shall be selected earth or granular fill material, free from sod, sticks, and roots over 1/2 inch in diameter, and free from hard lumps, clods, or rock in such quantity or concentration as to interfere with the specified compaction. Material shall be of proper moisture content for specified compaction.

PART 3 - EXECUTION

3.01 GENERAL

A. Trenching work shall be performed in a safe and proper manner, with suitable precautions being taken against hazards of every kind. Trenching shall provide adequate working space and clearances for the work to be performed therein.

B. Trenching and backfilling during freezing weather shall not be done except by permission of the Engineer. No backfill materials shall be installed on frozen surfaces nor shall frozen materials, snow, or ice be placed in any backfill.

C. When operating on pavements or walks all equipment shall be rubber tired, except for excavation equipment. Excavating equipment, in such cases, shall not have grousers, cleats, or lugs on the tracks. The Contractor shall take all precautions necessary to protect the existing pavements and walks.

D. No classification of excavated materials will be made. Trenching and trenching work shall include the removal and subsequent handling of all materials excavated or otherwise removed in performance of the contract work, regardless of the type, character, composition, or condition thereof.

E. Pipe lines and other existing underground installations and structures in the vicinity of the work to be done hereunder are indicated on the plans according to the best information available to the Owner. The Owner does not guarantee the accuracy of such information. The Contractor shall make every effort to locate all underground pipe lines, conduits, and structures by contacting owners of underground utilities and by prospecting in advance of trench excavation. Damage to any existing underground installation caused by the Contractor's operation shall be repaired at the Contractor's expense.

F. Any delays or extra cost to the Contractor caused by pipe lines or other underground structures or obstructions not shown by the plans, or found in locations different than those indicated, shall not constitute a claim for extra work, additional payment or damages.

G. Erosion control of disturbed areas will be required during the construction period through the use of check dams, siltation pools, mulching, etc.

H. Operation:
   1. Use all means necessary to control dust or mud that may interfere with operation.
   2. Maintain all streets and driveways free of dirt and materials from Contractor's operation.

I. Protection:
   1. Use all means necessary to protect material and preserve specification requirements.
   2. Replace all damaged material or material that has lost specification requirements.

3.02 TRENCH EXCAVATION

A. General:
   1. The Contractor shall not open more trench in advance of pipe laying than is necessary to expedite the work. One block or 400 feet, whichever is the shorter, shall be the maximum length of open trench permitted on any line under construction.

2. Except where tunneling is permitted by the Engineer, all trench excavation shall be open cut from the surface.
3. Trench walls shall be vertical, and braced where necessary, in streets or improved area unless otherwise authorized by Engineer.

B. Alignment and grade:
1. All sewer and water line alignments and grades shall be established using a pipe laser instrument.
2. Sewer lines:
The alignment and grade or elevation of each pipe line shall be fixed and determined by means of offset stakes. Vertical and horizontal alignment of pipes and the maximum joint deflection used in connection therewith shall be in conformity with the requirements of the specification covering the installation of the pipe being laid in each case.
3. Water lines:
Trenches shall be carefully excavated so that the minimum cover over top of pipe will be 42 inches to existing street or ground surface, or to future surface when indicated. Greater cover at some locations along the line may be required due to street or ground profile and clearance of culverts, structures, utility lines, etc.

C. Minimum trench widths and pipe clearances:
1. Trenches shall be excavated to a width which will provide adequate working space and pipe clearances for proper pipe installation, jointing, and embedment. Refer to standard construction drawings.
2. The trench widths shall be maintained as narrow as possible below an elevation 1'-0" above the top of the installed pipe.
3. Where necessary to reduce the earth load on trench banks to prevent sliding and caving, the banks may be cut back on slopes which shall not extend lower than 1'-0" foot above the top of the pipe.

D. Mechanical excavation:
1. The use of mechanical equipment will not be permitted in locations where its operation would cause damage to buildings, culverts, or other existing property, utilities, or structures above or below ground; in all such locations, hand excavating tools and methods shall be used.
2. Mechanical equipment used for trench excavation shall be of a type, design, and construction and shall be so operated, that the rough trench excavation bottom elevation can be controlled, that uniform trench widths and vertical side walls are obtained at least from an elevation 1'-0" foot above the top of the installed pipe to the bottom of the trench, and the trench alignment is such that the pipe when accurately laid to specified alignment will be centered in the trench with adequate clearance between the pipe and side walls of the trench.

Undercutting of the trench side wall to obtain clearance will not be permitted.

E. Excavation below pipe subgrade:
Except where otherwise required, pipe trenches shall be excavated below pipe subgrade elevations to provide for the installation of granular fill pipe foundation material.

F. Unauthorized trench widths:
Where the width of the lower portion of the trench as excavated at any point exceeds the maximum permitted, either pipe of adequate strength, classification or gage, special pipe embedment, or Class A concrete arch encasement (for concrete pipe only), as required by loading conditions and as determined by the Engineer, shall be furnished and installed by and at the expense of the Contractor.

G. Grubbing:
Grub out live roots for a distance of at least 6 inches below and 8 inches on sides of outside surface of pipe.

H. Bell holes:
Bell holes shall provide adequate clearance for the tools and methods used in installing the pipe. No part of any bell or coupling shall be in contact with the trench bottom, trench walls, or the granular fill when the pipe is jointed.

I. Cutting concrete pavement and walks:
1. Cuts in concrete and asphalt pavements shall be no larger than necessary to provide adequate working space for proper installation of pipe and pipe line appurtenances. Cutting shall be started with a concrete saw (or by other cutting method approved by the Engineer) and in a manner which will provide a clean groove at least 1-1/2 inches deep along each side of the trench and along the perimeter of cuts for structures.
2. Pavement and base pavement over trenches excavated for pipe lines shall be removed so that a shoulder not less than 6 inches in width at any point is left between the cut edge of the pavement and the top edge of the trench. The trench width at the bottom shall not be greater than at the top and no undercutting will be permitted. Pavement cuts shall be made to and between straight or accurately marked curved lines which shall be parallel to the centerline of the trench.

3.03 SHEETING AND SHORING

A. Except where banks may be cut back on a stable slope, excavation for trenches shall be properly and substantially sheeted, braced, and shored to prevent caving or sliding, to provide protection for the workmen and the work, and to provide protection for existing structures and facilities. Sheeting, bracing, and shoring shall be designed and built to withstand

all loads that might be caused by earth movement or pressure, and shall be rigid, maintaining its shape and position under all circumstances.

3.04 STABILIZATION

A. General:
1. Trench bottoms shall be firm, dense, and thoroughly compacted and consolidated; shall be free from mud and muck; and shall be sufficiently stable to remain firm and intact under the feet of the workmen.
2. Trench bottoms which are otherwise solid, but which become mucky on top due to construction operations, shall be reinforced with one or more layers of granular fill material or other crushed stone or gravel embedded therein. Not more than 1/2 inch depth of mud or muck shall be allowed to remain on stabilized trench bottoms when the pipe bedding material is placed thereon. The finished elevation of stabilized subgrades for concrete structures shall not be above the subgrade elevations.
3. All stabilization work hereunder shall be performed by and at the expense of the Contractor.
4. If the subgrade for pipe can be stabilized with a thickness of granular fill of 12 inches or less below bottom of pipe, or subgrade of structure, such stabilization will be at the Contractor's expense.

3.05 BLASTING

A. Blasting will not be allowed, unless approved by the Owner.

B. The Contractor shall comply with all laws, ordinances, applicable safety code requirements, and regulations relative to the handling, storage, and use of explosive and the protection of life and property. He shall be responsible for all damage caused by his blasting operations.

C. Suitable weighted plank covering or mattresses shall be provided to confine all materials, lifted by blasting, within the limits of the excavation or trench.

D. All rock which cannot be handled and compacted as earth shall be kept separate from other excavated materials and shall not be mixed with other backfill or embankment materials.

3.06 REMOVAL OF WATER

A. The Contractor shall provide and maintain adequate dewatering equipment to remove and dispose of all surface and ground water entering excavations, trenches, or other part of the work. Each excavation shall be kept dry during subgrade preparation and continually thereafter until the structure to be built, or

the pipe line to be installed, therein is completed to the extent that no damage from hydrostatic pressure, flotation, or other causes will result.

3.07 STANDARD COMPACTION AND FIELD DENSITY TESTS

A. General:
Wherever the terms, "____% of Maximum Density" or "Optimum Moisture", are used, Maximum Density and Optimum Moisture shall be determined by the standard compaction test described below.

B. Standard compaction test:
1. The standard compaction test shall be in accordance with AASHTO Desig. T99, except as modified below.
2. For samples containing no material retained on the No. 4 sieve, use Method A or B. When the plasticity index of the soil is greater than 25 (heavy clays), the soil shall be placed in the mold in 4 layers, each compacted as outlined in the test method used.
3. For samples containing material retained on the No. 4 sieve, use Method D, preferably, or Method C. The amount retained on the 3/4 inch sieve shall be weighed and discarded. To prepare the sample for the compaction test, the same amount of 3/4 inch to No. 4 sieve material shall be substituted for the portion discarded.

C. Field density test:
Field density shall be obtained using the sand cone method (AASHTO Desig. T-147), by the balloon method, or by use of any satisfactory materials or equipment suitable to the conditions prevailing in the material being tested. The calculated density obtained in this test is divided by the Maximum Density as determined by the Standard Compaction Test to determine the percent compaction obtained.

D. Rock correction:
When the amount of material retained on the No. 4 sieve is different in the field density tests than that in the sample used in the standard compaction test, the actual degree of compaction shall be determined by applying a correction factor to the apparent percent compaction. This correction factor may be arrived at by any well established engineering procedure or by the recommendations of the State Highway Commission, "Geology and Soils Manuals," said recommendations being made a part of this Contract by reference.

E. Comparison with surrounding soil density:
It will be assumed that undisturbed surrounding soil in its natural state will have a field density of 87% of maximum density. On this basis, where 90% of maximum density is specified, the required density will be 103.5% of density of the surrounding soil. Where 95% of maximum density is specified, the required density will be 109% of the density of the surrounding soil.

3.08 PIPE EMBEDMENT

A. General:

1. Place pipe embedment material on a suitably prepared subgrade in lifts not exceeding 6 inches and bring up evenly on both sides of pipe. Do not dump over side of trench in any manner that will bring earth into the embedment material or displace the pipe. Compact, vibrate, or slice with a shovel, in such manner that material fill will take its final compaction and provide uniform and solid bearing under the pipe and its haunches.

B. Sewer pipe bedding:

1. Class B bedding shall be used on all piping, except for locations called out where Class A bedding is required.
2. All granular bedding is to be omitted in a 5 foot section of trench immediately upstream of each manhole. The trench bottom is to be shaped to fit the pipe bottom with hand compaction of earth around the sides and to a point 2 feet above the pipe. If earth is unsuitable for pipe support or backfill, over excavate and replace with suitable material. Earth in the 5 foot section of trench length shall be compacted to at least 90% of optimum density.
3. Placement and compaction. All granular fill material beneath the pipe shall be spread and the surface graded to provide a uniform and continuous support beneath the pipe at all points between bell holes or pipe joints. It will be permissible to slightly disturb the finished subgrade surface by the withdrawal of pipe slings or other lifting tackle.
4. After each pipe has been graded, aligned and placed in final position on the bedding material, and shoved home, sufficient pipe embedment material shall be deposited and compacted around each side of the pipe and back of the bell or end thereof to firmly hold and maintain the pipe in proper position and alignment during subsequent pipe jointing, embedment, and backfilling operations.
5. Embedment material shall be deposited and compacted uniformly and simultaneously on each side of the pipe to prevent lateral displacement of the pipe and brought to a minimum height of 6 inches above the top of the pipe.

C. Water line pipe bedding:

1. Where rock has been excavated, selected sand or granular material shall be placed under the sides and around the pipe to a point 6 inches above the top of the pipe. Embedment material shall be deposited simultaneously on each side of the pipe to prevent lateral displacement of the pipe.
2. When not in rock excavation, all buried pipe shall be installed with sand bedding material.

3.09 TRENCH BACKFILL COMPACTION

A. General:
All trench backfill above pipe embedment shall conform to one of the following specifications:

1. Ninety percent compacted backfill shall apply.
   a. Under streets, drives, or state or county highways surfaced with gravel, crushed stones, "blacktop" or other low or intermediate type surfacing.
   b. In street, road, highway, railway, or alley rights-of-way.
   c. In traveled ways.
   d. In established lawns.
   e. Any line within 5 feet of back of curb or 5 feet of street surfacing if no curb, either perpendicular to or parallel to the street.
2. Ninety-five percent compacted backfill shall apply.
   a. Under concrete, asphaltic concrete, brick, concrete structures, or other high type pavements.
   b. Under concrete walks, curbs, gutters, and culverts.
   c. Under all types of street surfacing where trench cut is approximately at right angles.
3. In areas not listed above, backfill shall be compacted to a density equal to the surrounding ground.
4. Six inches of topsoil shall be placed in the top of trenches that are to be covered with sod or to be seeded.
5. If specified density cannot be obtained with available earth, the Contractor shall furnish and haul granular fill material or suitable earth at his expense. Unsuitable earth shall be disposed of at the Contractor's expense.
6. The Engineer will call for density tests to be made whenever deemed necessary. The specified density will be the minimum allowed and the obtainment thereof will be entirely the Contractor's responsibility.
7. Thickness of backfill layers will be determined by the coordination of test results with field performance and equipment used. The Contractor will be expected to maintain established procedures except where unusual conditions arise. If greater than 12 inch thick compacted layers are used, the Contractor shall hand excavate to the test level as directed by the Engineer and then refill the test excavation with compacted backfill to the specified density.
8. All County and City gravel surface roads shall be backfilled entirely with approved crushed rock or river gravel. The disposal of unsuitable material excavated will be the responsibility of the Contractor.
9. All completed lines shall be returned, in the opinion of the Engineer, as nearly as possible to original condition, including reseeding, resodding, or repaving.
10. Flowable fill such as "K" Crete or equal product shall be used only when determined applicable by City Engineer and Public Works Director.

3.10 DRAINAGE MAINTENANCE

A. Trenches across roadways, driveways, walks, or other trafficways adjacent to drainage ditches or water courses shall not be backfilled prior to completion of backfilling the trench on the upstream side of the trafficway, to prevent impounding water after the pipe has been laid. Bridges and other temporary structures required to maintain traffic across such unfilled trenches shall be constructed and maintained by the Contractor. Backfilling shall be done so that water will not accumulate in unfilled or partially filled trenches. All material deposited in roadway ditches or other water courses crossed by the line of trench shall be removed immediately after backfilling is completed and the section, grades, and contours of ditches or water courses shall be restored to their original condition. Surface drainage shall not be obstructed longer than necessary.

3.11 FINAL GRADING AND DISPOSAL OF EXCESS EXCAVATED MATERIALS

A. General:
1. All excess excavated materials shall be disposed of by the Contractor away from the site of the work.
2. Pavement and pavement base material, excavated rock in excess of the amount permitted to be and actually installed in trench backfill, junk, and debris encountered in excavation work, and other similar waste materials shall be disposed of away from the site of the work.
3. The disposal of waste and excess excavated materials, including hauling, handling, leveling, and surfacing, shall be at the Contractor's expense.

B. Uncompacted backfill:
Where uncompacted backfill is specified, excess earth from excavations, over and above that displaced by the pipe, shall be mounded directly over the pipe trench, in such manner that the earth will settle into the trench as natural consolidation occurs. Openings for natural drainage shall be provided. The mounded earth shall be graded to a smooth, uniform surface. That portion of the earth displaced by the pipe shall be uniformly and smoothly graded adjacent to the trench.

C. Other types of backfill:
For all types of backfill other than uncompacted, the Contractor shall dispose of excess excavated material above the surface of the ground or subgrade of pavement walks, etc. unless otherwise directed. Where directed, the Contractor shall leave all or a portion of the excess earth and grade smoothly along and adjacent to the trench in the manner prescribed by the Engineer. If directed, he shall grade excess earth into adjacent low areas, fine grading and sloping to drain.

D. Final grading:
   1. Just prior to completion and acceptance of the project, the Contractor shall final grade over all pipe trenches and around structures, filling in any places that may have settled during the period between construction of each line and the completion of the entire Contract. Finished surface shall be bladed and aligned to a neat and uniform appearance.
   2. Improved yards and lawns:
      Fine grade, suitable for seeding or sodding. Hand rake earth off grass in established lawn areas, unless directed to leave excess earth as outlined above.

E. Deficiency of backfill:
   Wherever there is a deficiency of material required to backfill to the specified surface or subgrade, the Contractor shall furnish the necessary amount of suitable earth at his expense.

F. Restoration of disturbed earth:
   The Contractor shall restore all earth areas disturbed from the original condition by his operations. Restoration will be by seeding, fertilizing, and mulching or by appropriate pavement and street repair.

3.12 RESPONSIBILITY OF CONTRACTOR FOR BACKFILL SETTLEMENT

A. The Contractor shall be responsible financially and otherwise, for:
   1. All settlement of trench and other backfill which may occur from time of original backfilling until the expiration of 1 year after the date of final payment for the entire contract under which the backfilling work was performed.
   2. The refilling and repair of all backfill settlement and the repair or replacement to the original or a better condition of all pavement, top surfacings, driveways, walks, surface structures, utilities, drainage facilities and sod which may have been damaged as a result of backfill settlement or which have been removed or destroyed in connection with backfill replacement operations.
   3. All damage claims or court actions against the Owner for any damage directly or indirectly caused by backfill settlement.

B. The Contractor shall make all necessary backfill replacements and repairs, or replacements appurtenant thereto, within 30 days after notification by the Owner or Engineer. Upon the Contractor's failure to do so, the Owner may do, or have done, the necessary work and charge the cost to the Contractor.

3.13 BARRICADES AND LIGHTS

A. All streets, roads, highways and other public thoroughfares which are closed to traffic shall be protected by means of effective barricades on which shall be placed acceptable warning signs. Barricades shall be located at the nearest intersecting public highway or street on each side of the blocked section.

B. All open trenches and other excavations shall be provided with suitable barriers, signs, and lights to the extent that adequate protection is provided to the public. Obstructions such as material piles and equipment, shall be provided with similar warning signs and lights.

C. All barricades and obstructions shall be illuminated by means of warning lights at night. All lights used for this purpose shall be kept on from sunset to sunrise. Materials stored shall be so placed, and the work at all times shall be so conducted, as to cause the minimum obstruction and inconvenience to the public.

D. All barricades, signs, lights and other protective devices shall be installed and maintained in conformity with applicable statutory requirements, and where within highway rights-of-way, as required by the authority having jurisdiction hereover.

3.14 MAINTENANCE OF TRAFFIC

A. The Contractor shall conduct his work so as to interfere as little as possible with public travel, whether vehicular or pedestrian; whenever it is necessary to cross, obstruct, or close roads, driveways, and walks, whether public or private, the Contractor shall at his own expense provide and maintain suitable and safe bridges, detours, or other temporary expedients for the accommodation of public and private travel, and shall give 24 hour advance notice to owners of private drives before interfering with them; provided however, that such maintenance of traffic will not be required at any point where the Contractor has obtained permission from the owner and tenant of private property, or from the authority having jurisdiction over the public property involved, to obstruct traffic at any designated point thereon and for the duration of whatever period of time as may be agreed upon.

END OF SECTION

PART 1 - GENERAL

1.01 SECTION INCLUDES

A. Boring under highways, roads, and railroads.

B. Casing pipe

1.02 RELATED SECTIONS

A. Section 01020: Trenching, Backfilling, and Compaction

1.03 SUPERVISION AND QUALITY

A. This work shall comply with all codes governing and all insurance requirements. Work shall be undertaken only when the construction superintendent is present and supervising the work.

1.04 REQUIREMENTS OF REGULATORY AGENCIES

A. Crossings shall be completed in accordance with applicable federal, state and local regulations. In the case of railroad crossings, the project shall comply with regulations established by the railroad company.

PART 2 - PRODUCTS

2.01 CASING PIPE

A. Steel Casing Pipe:

1. Smooth wall casing pipe shall be of welded steel construction and shall be new material with a minimum yield point of 35,000 psi. The casing pipe shall be cleaned and coated both inside and outside with two coats of coal tar paint, Koppers "Bitumastic Super Service Black," Tnemec "450 Heavy Tnemecol," or USS Chemicals "Pitt Chem 103."

Carrier Pipe	4"	6"	8"	10"	12"	14"	16"	18"	20"
Casing	10"	12"	14"	16"	18"	20"	24"	30"	30"

2. Casing wall thickness shall be 1/4 inch thick for casing pipe 10 inches thru 16 inches, 3/8 inch thick for casing pipe 18 inches thru 24 inches, 1/2 inch thick for 30 inches.

B. P.V.C. Casing Pipe
1. Casing pipe shall be ASTM D2241, Class 200 (SDR 21) with standard joints with "O" ring gasket.

Carrier Pipe	1 1/2"	2"	2 1/2"	3"
Casing	4"	4"	6"	6"

2.02 CASING SPACERS

A. Spacers for steel casing shall be 4 inch square creosoted wood skids, with stainless steel bands.

PART 3 - EXECUTION

3.01 GENERAL

A. Crossings under highways, roads and railroads shall be continuously encased under the through roadways, median, ramps, and shoulder area to the limits called for or required by the federal, state, and local regulations. Railroad crossings shall conform to the requirements of the regulations established by the railroad company.

B. Work shall be performed in a safe and proper manner, with suitable precautions being taken against hazards of every kind. All crossings shall be bored, unless rock formations or other obstructions are encountered that prevents boring or pushing operations. If such conditions are encountered, excavation shall be performed by standard tunneling methods.

C. Excavations shall provide adequate clearance for installation of and removal of equipment.

D. Backfilling and construction of fills and embankments during freezing weather shall not be done except by permission of the Engineer. No backfill, fill or embankment materials shall be installed on frozen surfaces nor shall frozen materials, snow, or ice be placed in any backfill, fill, or embankments.

E. When operating on pavements or walks all equipment shall be rubber tired, except for excavation equipment. Excavating equipment, in such cases, shall not have grousers, cleats, or lugs on the tracks. The Contractor shall take all reasonable precautions to protect the existing pavements and walks.

F. No classification of excavated materials will be made. Boring excavation and trenching work shall include the removal and subsequent handling of all materials excavated or otherwise removed

in performance of the contract work, regardless of the type, character, composition or condition thereof.

G. Pipe lines and other existing underground installations and structures in the vicinity of the work to be done hereunder are indicated on the plans according to the best information available to the Owner. The Owner does not guarantee the accuracy of such information. The Contractor shall make every effort to locate all underground pipelines, conduits, and structures by contacting owners of underground utilities and by prospecting in advance of excavation and boring. Damage to any existing underground installation caused by the Contractor's operation shall be repaired at the Contractor's expense.

H. Any delays or extra cost to the Contractor caused by pipe lines or other underground structures or obstructions not shown by the plans, or found in locations different than those indicated, shall not constitute a claim for extra work, additional payment or damages.

I. Erosion control of disturbed areas will be required during the construction period through the use of check dams, siltation pools, mulching, etc.

J. The Contractor shall meet the specific requirements of the Highway Department or Railroad. The Contractor shall obtain all necessary permits and insurance.

K. Operation:
Use all means necessary to control dust or mud that may interfere with operation.

L. Protection:
1. Use all means necessary to protect material and preserve specification requirements.
2. Replace all damaged material or material that has lost specification requirements.

3.02 EXCAVATION

A. The Contractor shall, during the entire period of construction, provide and maintain any necessary equipment as will, whenever practicable, keep his excavations reasonably free from water pending construction. When necessary to use pumps the Contractor must dispose of the water without detriment to adjacent properties.

3.03 SHEETING AND SHORING

A. General:
Except where banks may be cut back on a stable slope, excavation for trenches shall be properly and substantially sheeted, braced and shored, as necessary, to prevent caving or sliding, to provide protection for the workmen and the work, and to provide protection for existing structures and facilities. Sheeting, bracing, and

shoring shall be designed and built to withstand all loads that might be caused by earth movement or pressure, and shall be rigid, maintaining its shape and position under all circumstances.

3.04 CASING AND CARRIER PIPE INSTALLATION

A. Casing pipe:
1. Before starting work on any boring, complete details of the method of operation and casing to be used shall be submitted to the Engineer for review. All permits shall be obtained by the Contractor.
2. Casing pipes shall have a clear inside diameter not smaller than the size indicated on the schedule.
3. The casing pipe shall be installed by jacking into place. Earth displaced by the casing pipe shall be removed through the interior of the casing by hand, by auger, or by other acceptable means. Sections of the casing pipe shall be welded together to form a continuous casing capable of resisting all stresses, including jacking stresses. The casing pipe in its final position shall be straight and true in alignment and grade. There shall be no space between the earth and the outside of the casing.

B. Carrier pipe:
Skids shall be strapped to each end of each piece of pipe. The wood skids shall be notched at each strap to prevent the strap from being in contact with the casing invert. The pipe shall then be pushed into the casing pipe with care being taken to ensure the joints are not displaced. The joints in the installed pipe within the casing shall be tested for leakage before the backfill is installed.

C. Casing backfill:
Following the installation of the carrier pipe in the casing pipe, the entire annular space between the pipe and the casing walls shall be filled. The ends of the casing shall then be closed with a concrete or masonry plug 8 inches thick.

3.05 FINAL GRADING AND DISPOSAL OF EXCESS EXCAVATED MATERIALS

A. General:
1. All excess excavated materials shall be disposed of by the Contractor away from the site of the work.
2. Excavated rock, junk, and debris encountered in excavation work, and other similar waste materials shall be disposed of away from the site of the work.
3. The disposal of waste and excess excavated materials, including hauling, handling, leveling, and surfacing, shall be at the Contractor's expense.

B. Restoration of disturbed earth:
The Contractor shall restore all earth areas disturbed from the original condition by his operations. Restoration will be by

seeding, fertilizing and mulching to obtain an established cover or by appropriate pavement and street repair.

3.06 RESPONSIBILITY OF CONTRACTOR FOR BACKFILL SETTLEMENT

A. The Contractor shall be responsible financially and otherwise, for:
   1. All settlement of trench and other backfill which may occur from time of original backfilling until the expiration of 1 year after the date of final payment for the entire contract under which the backfilling work was performed.
   2. The refilling and repair of all backfill settlement and the repair or replacement to the original or a better condition of all pavement, top surfacings, driveways, walks, surface structures, utilities, drainage facilities and sod which may have been damaged as a result of backfill settlement or which have been removed or destroyed in connection with backfill replacement operations.
   3. All damage claims or court actions against the Owner for any damage directly or indirectly caused by backfill settlement.

B. The Contractor shall make all necessary backfill replacements and repairs, or replacements appurtenant thereto, within 30 days after notification by the Owner or Engineer. Upon the Contractor's failure to do so, the Owner may do, or have done, the necessary work and charge the cost to the Contractor.

3.07 MAINTENANCE OF TRAFFIC

A. The Contractor shall conduct his work so as to interfere as little as possible with public travel, whether vehicular or pedestrian; whenever it is necessary to cross, obstruct, or close roads, driveways, and walks, whether public or private, the Contractor shall at his own expense provide and maintain suitable and safe bridges, detours, or other temporary expedients for the accommodation of public and private travel, and shall give reasonable notice to owners of private drives before interfering with them; provided however, that such maintenance of traffic will not be required at any point where the Contractor has obtained permission from the owner and tenant of private property, or from the authority having jurisdiction over the public property involved, to obstruct traffic at any designated point thereon and for the duration of whatever period of time as may be agreed upon.

END OF SECTION

PART 1 - GENERAL

1.01 SECTION INCLUDES

A. Cast-in-place concrete.

B. Concrete floor sealer.

1.02 QUALITY CONTROL

A. Supervision:
1. Provide full time superintendent on the project who is qualified and experienced in concrete construction. Superintendent shall direct all work in connection with concrete construction.
2. Finishers shall be journeymen concrete finishers experienced in concrete finish work.

B. Codes and standards:
Work covered by this Specification shall be as specified herein and as specified in "Structural Concrete for Buildings", ACI 301-66 or latest revision thereto.

1.03 TESTING

A. Laboratory and field testing shall be made on all concrete material including compression yield, air content, and slump test to the following ASTM Test and Specifications.
1. ASTM C31: Making and curing concrete compressive and flexuralstrength test specimens in the field.
2. ASTM C33: Specification for concrete aggregate.
3. ASTM C39: Test for compressive strength of cylindrical concrete specimens.
4. ASTM C87: Test for effect or organic impurities in fine aggregate on strength of mortar.
5. ASTM C143: Test for slump of portland cement concrete.
6. ASTM C15: Specification for portland cement.
7. ASTM C172: Sample fresh concrete.
8. ASTM C231: Test for air content of freshly mixed concrete by pressure method.
9. ASTM C260: Specification for air entraining admixtures forconcrete.
10. ACI 211-1-70: Recommended practice for selecting proportions for normal weight concrete.
11. ACI 214-65: Recommended practice for evaluation of compression test results of field practice.

B. Concrete test cylinders shall be made at the job site by the Contractor. Concrete sample shall be taken from concrete being placed. Four cylinders shall be made for each day's pour over 5 cubic yards. Two cylinders shall be made for each day's pour for minor structural concrete as manholes, walks, etc.

Identify test cylinders to area concrete was placed. Cure cylinders same as job concrete.

Deliver three cylinders at 4 days. Test one at 7 days, moist cure other and test two at 28 days. Hold 4th cylinder for backup. Job cylinder tests are the basis for acceptance of concrete.

C. Air content shall be measured at the job site by the pressure method ASTM C231. Air test shall be conducted on each day's pour over 5 cubic yards. Air test shall be made by Contractor. Each test shall be recorded and identified to area concrete was placed. Test results shall be submitted to the Engineer.

D. Slump test shall be made on concrete pours by the Contractor. Each test shall be recorded and identified to area concrete was placed. Test results shall be submitted to the Engineer.

E. All laboratory testing, field testing and delivery charges shall be paid by the Contractor.

1.04 SUBMITTALS AND CERTIFICATES

A. Contractor shall submit name and location of transit mix company for approval.

B. Submit complete laboratory testing data on aggregate gradation, deleterious substances, and durability of mix additives and cement.

C. Delivery tickets shall be required with each load indicating mix design.

1.05 PRODUCT HANDLING

A. Transit mix:
Concrete shall be handled and preserved in its "batched" proportion during transportation. Mixing time shall not exceed 45 minutes and excess water shall not be added. Concrete improperly cared for or mixed in the truck longer than 45 minutes shall be disposed of away from the project.

B. Defective concrete:
Damaged or defective concrete shall be repaired or removed and replaced immediately as directed by the Engineer.

PART 2 - PRODUCTS

2.01 CONCRETE

A. General:

1. All concrete used in the project shall be furnished by a reputable permanent concrete plant using transit mix trucks. The plant shall be located within a reasonable distance from the project so travel time is 30 minutes or less. Supplier shall have adequate bins that weigh material by approved scale system. The supplier shall have an adequate number of modern trucks to ensure delivery of concrete as required for placing schedule. Supplier shall be subject to approval of the Engineer.
2. The Contractor shall use whatever means necessary to ensure concrete delivered to the project is properly batched with approved kinds and quantities of materials.

B. Cement:

All cement shall be Type I Portland cement conforming to ASTM C150.

C. Fine aggregate:

1. Fine aggregate shall consist of natural sand conforming to ASTM C33. Sand shall be well graded, washed, and shall conform to the following sieve analysis:

Sieve Size	Percent Passing
1/2 inch	100
3/8 inch	99-100
No. 4	95-100
No. 8	85-95
No. 16	60-85
No. 30	30-60
No. 50	10-30
No. 100	0-5

2. The sand shall not have more than 35 percent retained between any two consecutive sieve sizes. Fineness modulus shall not be less than 2.5 nor more than 3.1.

3. The amount of deleterious substances in fine aggregate, each determined on independent samples complying with the grading requirements of Division 3, shall not exceed the following limits:

4. Table 1. Limits for Deleterious Substances in Fine Aggregate for Concrete:

Item	Maximum percent by Weight of Total Sample
Clay Lumps	0.25
Material Finer than No. 200 Sieve	2.0
Coal & Lignite	0.06
Sticks, Leaves & Other Deleterious Material	0.25

5. Fine aggregate shall be free of injurious amounts of organic impurities. Except as herein provided, aggregates subjected to ASTM test No. C 40-56T for organic impurities and producing a color darker than the standard shall be rejected.

6. Fine aggregate shall be free of material that could react harmfully with alkalies in the cement. If such materials are present in injurious amounts, the fine aggregate shall be rejected, or shall be used with cement containing less than 0.6 percent alkali calculated as sodium oxide or with the addition of a material that has been shown to inhibit undue expansion due to the alkali-aggregate reaction.

7. Except as provided above, fine aggregate subjected to five cycles of the soundness test (ASTM C88-59T), shall show a loss, weighted in accordance with the grading of a sample complying with the limitations set forth above, not greater than 10 percent when sodium sulfate is used or 15 percent when magnesium sulfate is used.

D. Coarse aggregate:

1. Coarse aggregate shall be crushed limestone having an established history of sound material conforming to ASTM C33 and shall be approved by the Engineer. Furnish soundness test results for approval of source. Coarse aggregate source shall not contain chert deposits.

Gradation

Sieve Size	Percent Passing
1½ inch	100
1 inch	95-100
1/2 inch	25-60
No. 4	0-10
No. 8	0-5

2. Satisfactory experience record shown for durability, otherwise pass soundness test ASTM C88-5 cycles using magnesium sulfate without splitting or losing more than 15 percent weight.

3. Contractor shall arrange and pay for testing if adequate history is not available.

E. Water:
1. Water for mixing and curing concrete shall be clean, and free from injurious amounts of sewage, oil, acid, alkali, salt or organic matter. Only potable water shall be used.

F. Concrete Mix:
1. All concrete for the project shall conform to the design mix listed in the table below. The concrete mix shall include water reducing agent and air entrainment of 6 percent air plus or minus 1-1/2 percent. Twenty-eight day design strength shall be 4500 psi. The mix is based on 60 percent coarse aggregate and 40 percent fine aggregate by volume. In the event the percentage of fine aggregate is increased, the amount of cement shall be increased as directed to provide equivalent strength.

Maximum aggregate size	- 1 inch
Maximum water	- 250 lb/cy
W/C weight ratio (maximum)	- 0.410
Cement	- 6.49 sacks/cy
Fiber mesh	1½ lbs/cy

2. The supplier may submit complete data mix to accomplish the above design with which he has had a history of success for the Engineer's approval. The Contractor shall furnish laboratory design mix for the approved materials if a "history" mix is not available.

3. Water reducing agent shall be one of the following: Pozzolith, WRDA, or Plastiment and used in the amount prescribed by the manufacturer and testing laboratory.

4. Air entraining agent shall be Sika AER or Protex AES. Proportions shall be prescribed by the manufacturer and testing laboratory.

G. Fibrous Concrete Reinforcement:
1. Fibrous material shall be Fibermesh 100 percent virgin polypropylene, fibrillated fibers.

2. Physical characteristics

a. Specific gravity	0.91
b. Tensile strength	80-110 ksi
c. Fiber length	graded per manufacturer

2.02 CURING MEMBRANES AND JOINTS

A. Curing membranes:
Curing membranes shall be 6 mil sheet polyethylene, Vis-Queen or equal.

PART 3 - EXECUTION

3.01 GENERAL

A. Inspection:
Inspect all work of other trades to insure installation is complete and ready for concrete placement. Verify all items are in place.

B. Conflicts:
Consult Engineer in case of conflict between placing and other equipment or material.

C. Fibrous Concrete Reinforcement:
1. Add fibrous material at time concrete is batched at the rate of 1.5 pounds per cubic yard of concrete.

3.02 PREPARATION

A. General:
1. Clean all forms and correct all fine grade damage.
2. Wet down all subgrades.
3. Verify all needed equipment for placing concrete is on hand: Vibrators, crane or pump, tremies, flumes, finishing equipment.
4. All keyways are to be in place.
5. Dry up excavation if any water is present.
6. Have cold weather equipment on hand if applicable.
7. Notify Engineer at least 48 hours in advance of placing concrete.

3.03 PLACING CONCRETE

A. General:
1. All concrete shall be placed in a manner and with adequate equipment which shall be subject to the Engineer's approval. Equipment for placing concrete shall include flumes, tremies, cranes or concrete pump for placing concrete; hand tool and finishing equipment for manipulation.
2. Concrete shall be placed in a logical sequence that will permit efficient operation, but shall provide structural continuity and strength required. Placing sequence shall be subject to general approval by the Engineer.
3. Flumes shall not be used at slopes flatter than 45 degrees. Concrete pumping equipment shall be designed for the purpose and shall be subject to approval by the Engineer.
4. Subgrade shall have been fine graded and moistened prior to placing concrete. Forms and keyways shall be carefully cleaned prior to placing concrete. Concrete shall be

placed uniformly in locations not to exceed 12 feet apart. Placing shall be a continuous operation using a heavy duty vibrator.

5. Tremies required for depth greater than 6 feet.
6. In case of pending inclement weather, prepare temporary covers to protect freshly placed and finished surfaces from surface damage. Protect for 12 hours.
7. Embedded screeds may be used unless otherwise called for. Screeds shall be accurately set and held in place by solid steel rods with mechanical clamps for attaching screed. Wood screed supports shall not be used. Screeds must be removed and voids filled while concrete is plastic.
8. Use grout or concrete with fine aggregate in place of coarse aggregate in first 4 inches above cold construction joint.
9. Keep working face of concrete "alive" and plastic.
10. Avoid over vibrating.
11. Do not transport concrete in form with vibrator.
12. Place concrete uniformly at spacing not to exceed 12 feet.
13. In hot weather, the forms, reinforcing and subgrade shall be wet down immediately before placing concrete.

B. Slump:

1.	Slump of concrete for 4" to 8" forms	4" to 6"
2.	Slump of concrete for 9" to 12" forms	2" to 4"
3.	Slump of concrete for 14" and wider	2" to 3"
4.	Slump of concrete for columns	2" to 4"
5.	Slump of concrete for footings	1" to 3"
6.	Slump of concrete for slabs, walks & paving	1" to 3"

C. Cold weather requirements:

1. Do not place concrete on ice or frozen subgrade.
2. Concrete ingredients shall be heated when the air temperature is below 40 degrees F or forecast to drop below that temperature within 24 hours of the time concrete is to be placed.
3. Heating shall be accomplished by heating either the aggregate or the mixing water, or both. Maximum temperature of the water or aggregates shall be 150 degrees F.
4. Temperature of concrete at time of delivery shall be not less than 60 degrees F nor greater than 80 degrees F.
5. During placing and finishing, concrete shall be maintained at a temperature of 50 degrees F or above, but not more than 80 degrees F.
6. During placing and finishing, the concrete shall be protected from wind to prevent loss of heat and rapid drying.
7. Heating of enclosures for flat slab finishing shall be done by vented heating methods. Open flame heating will not be permitted.
8. Adequate facilities shall be provided prior to beginning concrete placement, for maintaining the ambient air

temperature at the surface of the concrete or forms at 70 degrees F for 5 days.

9. Protective measures shall be maintained for at least 4 days beyond the heating period, to prevent sudden cooling of the concrete. During this time, the concrete shall not be allowed to drop in excess of 20 degrees F in any 24 hour period with a minimum temperature of 40 degrees F.
10. Newly finished flatwork shall be covered and protected for at least 14 days against exposure to rain, snow, sleet and ice.
11. During the entire protection period adequate means shall be provided to prevent loss of moisture from the concrete surface.
12. All methods for protecting and heating concrete shall be subject to approval of the Engineer.
13. See Part 3.05 for curing requirements.

D. Hot weather requirements:
1. Concrete exposed to direct weather shall not be placed at temperatures above 100 degrees F.
2. Temperature of concrete when placed shall not exceed 85 degrees F.
3. In dry, hot or windy weather, sunshades and wind breakers shall be required during finishing operations.
4. As soon as practicable without damage to the surface finish, all exposed concrete shall be covered and kept continuously wet. Maintain concrete below 100 degrees F.
5. See Part 3.05 for curing requirements.

3.04 FINISHING CONCRETE

A. General:
1. All slabs, walks, and decks shall be sloped uniformly to drain to floor drains or to finish grade, and shall drain completely without ponding water.
2. Finish shall be of specified texture and uniform in color and appearance. Approval of finish is required on first concrete placed.
3. All voids in slabs and horizontal surfaces are to be filled during finishing operation. Voids in formed surfaces are to be repaired immediately at the time forms are removed.
4. Avoid over finishing, late finishing, rewatering, and other techniques that may cause "crazing."
5. Provide adequate manpower and equipment for finishing prior to placing concrete.
6. Initiate curing process as soon as surface strength will permit.

B. Formed surfaces exposed to view:
1. Remove forms as soon as curing and strength development permits.
2. Remove tie cones from each side of wall and fill with sand cement grout.

3. Break off all "fins"; grind as required for uniform appearance.
4. Grind all form "off-set" where concrete will be visible after construction is complete.
5. Chisel out all loose material in "honeycomb" area until only solid concrete exists. Fill void with sand, cement grout (3:1 mix), and cure for 5 days.
6. Sandblast to expose air voids that are close to the formed surface. Rub walls with sand, cement grout (3:1 mix) filling all voids. Do not plaster. Cure rubbed walls for 5 days.
7. Stone to remove any sharp edges.

C. Pavement:
1. Screed and float to eliminate coarse aggregate in surface material. Steel trowel to produce dense surface.
2. Final finish to be applied with a medium stiff broom, or with canvas strip dragged back and forth across concrete surface. Finished texture is to be medium coarse but not to expose coarse aggregate or voids in surface.

D. Construction joints:
Construction joint concrete contact surfaces shall be finished with a wood float. Keyways in floors shall be tied in place before placing concrete.

3.05 CURING

A. General:
1. All concrete shall be continuously moist cured a minimum of 5 days after placing and finishing or 5 days after repairing.
2. Protect all concrete surfaces from damage during and after curing period.

B. Horizontal surfaces:
1. Cover with 6 mil polyethylene sheet. Lap edges 6 inches and seal. Hold in place with 2 by 4's at 4 foot centers or similar method. Placement shall not let air circulate under sheets.
2. Place polyethylene sheets as soon as finish can be walked on without damage. Sheets must be in place within 6 hours after finish.
3. Leave polyethylene sheets in place 5 days.

C. Formed surfaces:
1. Forms are adequate if left in place 5 days.
2. Cover top as described in B above.
3. If forms are removed to "stone" finish or repair concrete, moisten surface and completely cover with 6 mil polyethylene sheets. Anchor in place.

3.06 DEFECTIVE WORK

A. General:
1. Defective concrete work shall be removed and replaced immediately.
2. Concrete of inadequate strength or having surface conditions indicating poor durability such as crazing, severe "map cracking," crumbling, or other evidence shall be considered defective.
3. Engineer shall be notified immediately when such conditions become apparent.

B. Repairing:
1. Repairing of minor faults such as small "honey comb" areas and voids may be patched. Repairs shall be made as described in 3.04D above.
2. Cure patched areas 5 days.

3.07 SPECIAL CONSTRUCTION

A. Joints:
1. All construction joints shall be made with canted 2 x 4 at least 2½ inches from wall face. All construction joint contact surfaces shall be finished with wood float finish.
2. All horizontal and vertical construction joints shall incorporate 2 x 4 in keyway. Finish surface of joints with wood float. Keyways shall be filled with grout or concrete with no coarse aggregate immediately ahead of placing concrete in walls above horizontal joints.

END OF SECTION

PART 1 - GENERAL

1.01 SECTION INCLUDES

A. Removing and replacement of various pavement surface required for this project.

1.02 RELATED SECTION:

A. Section 01020: Trenching, Backfilling,and Compaction

1.03 JOB CONDITION:

A. Operation:
1. Use all means necessary to control dust or mud that may interfere with the neighborhood.
2. Traffic access shall be maintained.

B. Protection:
1. Use all means necessary to protect material and preserve specification requirements.
2. Replace all damaged material or material that has lost specification requirements.

PART 2 - PRODUCTS

Not Specifically Required

PART 3 - EXECUTION

3.01 STREET REPAIR AND DRIVEWAY REPAIR

A. General:
These specifications provide a minimum standard for the removing of various pavement surfaces, open trenches, excavating, method of backfilling and replacement of various pavement surfaces. These specifications meet the requirements of the Owner as a standard to be followed in all cases where street surfaces are disturbed in the process of any and all excavation work.

B. Class A Street (Portland cement concrete pavement):
1. Prior to replacement of the concrete pavement, the concrete surface shall be scored with a saw on each side of the required excavation to a minimum depth of 2 inches. The size

of the area cut shall be 1 foot greater in all directions than the size of the excavation. This is to provide a minimum 6 inch shoulder of undisturbed subgrade surrounding the excavation.

2. All broken concrete shall be removed from the site and not used for backfill material.
3. The walls of the excavation shall be vertical for the full length. Sufficient bracing or shoring shall be provided to hold the excavation walls in vertical plane and to prevent under-cutting of the undisturbed pavement. Sloping of trench walls in deep excavations may be permitted by the Owner or his authorized representative. Bracing or shoring may be omitted where, in the opinion of the Owner's authorized representative, depth of excavation and soil conditions warrant.
4. All excavated materials shall be removed and disposed of after work within the excavated area is complete. The excavation shall be backfilled with clean 1/2 inch aggregate, 3/8 minimum to 3/4 maximum.
5. The pavement removed shall be replaced with high early strength Class A concrete having a compressive strength of 3,750 pounds per square inch at 27 days. The new finish shall be flush with the present street surface.

C. Class B Street (Hot mix asphaltic concrete or brick surface):

1. Conform to paragraphs (1) through (4) inclusive of the specifications for Class A Street (Portland cement concrete pavement).
2. All removed paving shall be removed from the site and not used for backfill material. The minimum 6 inch shoulder shall be excavated to a point no less than 9 inches below the existing street surface. Across the backfilled excavation and resting on the 6 inch shoulders shall be poured a 6 inch slab of high early strength Class A concrete having a compressive strength of 3,750 pounds per square inch at 27 days. After 48 hours, this slab shall be covered with 3 inches of hot mix asphalt and rolled. The new finish shall be flush with the present street surface.

D. Class C Street (D.A.S.T., double asphalt surface treatment roads with base):

1. Conform to paragraphs (1) through (4) inclusive of the specifications for Class D Streets below, except final 6 inches of backfill shall be rolled stone base material. The crushed rock base shall be replaced by applying two lifts of 3 inch each of crushed rock to state highway specifications. Each lift shall be saturated with water and rolled. When compaction has been attained, and surface moisture evaporated, double asphalt surface treatment shall be applied. Penetration course shall be MC-0 at the rate of 0.20 gallon per square yard. Surface course shall be RC-3 at the rate of 0.35 gallon per square yard and to be covered with clean 3/8 inch to 1/2 inch crushed aggregate at the rate of 20 pounds

per square yard with a lap of 1 foot outside the disturbed area. Surface course shall be applied twice.

E. Class D Street (Surface asphalt treatment roads and earth base):
1. Initial cutting will be permitted by excavating machinery.
2. Excavation wall shall be vertical and shall be braced and shored to prevent undercutting or crumbling. Sloping of trench walls in deep excavations may be permitted by the Owner's authorized representative, if depth of excavation and soil conditions warrant.
3. Backfill shall consist of clean 1/2 inch aggregate or of rolled stone base material, to the level of the existing paving.
4. Surface treatment shall conform to penetration and surface course for Class C Streets. Surface course shall be applied once.

F. Crushed Stone Streets or Drives:
1. Six inches of compacted stone base meeting Missouri Highway Spec. 1007.1, Type 1 aggregate, or State of Kansas equivalent, shall be placed over all disturbed areas.
2. Preparation shall be as required by the applicable subarticles of Section 203 of the Missouri Standard Specification for Highway Construction, 1977 Edition, or State of Kansas equivalent.
3. Crushed stone shall be placed and compacated in two lifts and in accordance with the applicable subarticles of Section 304.

END OF SECTION

PART 1 - GENERAL

1.01 SECTION INCLUDES

A. Fertilizer.

B. Mulch.

C. Seed.

D. Preparation.

E. Maintenance.

1.02 RELATED SECTIONS

A. Section 01020: Trenching, Backfilling, and Compaction

1.03 ALTERNATE METHODS AND PRODUCTS

A. Alternate methods from those specified will be considered for use, provided that in the Engineer's opinion the end product will be equal to or exceed that which would result from the specified methods and products.

1.04 DEFINITIONS

A. Weeds: Includes Dandelion, Jimsonweed, Quackgrass, Horsetail, Morning Glory, Rush Grass, Mustard, Lambsquarter, Chickweed, Cress, Crabgrass, Canadian Thistle, Nutgrass, Poison Oak, Blackberry, Tansy Ragwort, Bermuda Grass, Johnson Grass, Poison Ivy, Nut Sedge, Nimble Will, Bindweed, Bent Grass, Wold Garlic, Perennial Sorrel, and Brome Grass.

1.05 REGULATORY REQUIREMENTS

A. Comply with regulatory agencies for (fertilizer and) herbicide composition.

1.06 QUALITY ASSURANCE

A. Provide seed mixture in containers showing percentage of seed mix, year of production, net weight, date of packaging, and location of packaging.

1.07 MAINTENANCE DATA

A. Submit maintenance data for continuing Owner maintenance.

B. Include maintenance instruction, cutting method, and maximum grass height; types, application frequency, and recommended coverage of fertilizer.

1.08 DELIVERY, STORAGE AND HANDLING

A. Deliver grass seed mixture in sealed containers. Seed in damaged packaging is not acceptable.

B. Deliver fertilizer in waterproof bags showing weight, chemical analysis, and name of manufacturer.

PART 2 - PRODUCTS

2.01 AGRICULTURAL LIMESTONE

A. Shall be agricultural limestone with not less than 90 percent passing the No. 4 sieve and containing not less than 40 percent calcium carbonate equivalent. Lime shall be applied at the rate recommended by soil test.

2.02 FERTILIZER

A. Shall be a standard commercial product which when applied at the proper rate will supply the equivalent quantity of total nitrogen, available phosphoric acid and soluble potash specified. Fertilizer shall be delivered to the site in bags or other suitable containers, each fully labeled, conforming to applicable state fertilizer laws, and bearing the name, trade name or trademark, and warranty of the producer.

B. Requirements per acre:
Six hundred pounds of 17-17-17 grade fertilizer or equivalent.

2.03 MULCH

A. Shall be vegetive mulch consisting of cereal straw from stalks of oats, rye, wheat or barley. Straw shall be free of prohibited weed seeds as stated in State Seed Law and shall be relatively free of all other noxious and undesirable seeds. Straw shall be clean and bright, relatively free of foreign material and be dry enough to be spread properly.

2.04 SEED

A. Seed shall be a mixture with the specified minimum purity and germination requirements, as follows:

Seed Type	% Mix (By Wt.)	Purity %	Germination %
Kentucky K-31 Fescue	50	97	85
Rye Grass	10	80	75
Creeping Red Fescue	20	85	80
Kentucky Blue Grass	20	75	70

Variation in the above mix to suit local conditions or time of year may be required.

B. Seed shall be labeled in accordance with USDA regulations. Care shall be taken during transportation to avoid segregation of seed mixtures.

C. Seed shall be sown at a rate of 217 pounds of seed mix per acre for drill seeding. Seed mixture shall be thoroughly mixed prior to application.

PART 3 - EXECUTION

3.01 GENERAL

A. The application of fertilizer, seed, and mulch shall follow each other in successive sequence as closely as possible. Seeding shall be accomplished in the first of the following two periods after completion of earthwork.

February 15 to May 1st
September 1st to October 1st

B. Seeding outside the specified seeding periods may be permitted at the Engineer's option, provided the Contractor is willing to make appropriate modifications to his seeding operations, and will guarantee the crop.

3.02 INSPECTION

A. Verify that prepared soil base is ready to receive the work of this Section.

B. Beginning of installation means acceptance of existing site conditions.

3.03 SURFACE PREPARATION

A. Immediately in advance of fertilizing, the surface to be seeded shall be repaired, if necessary, to eliminate all damage from erosion or construction operations. The surface shall then be loosened and thoroughly pulverized by discing, harrowing and raking or other approved methods, to such an extent that it is free from sod, stones, clods, or roots. All growth of vegetation that will seriously interfere with planting operations shall be removed and disposed of. The final surface shall be smooth and uniform, and left in such a condition as to prevent formation of low places and pockets.

3.04 FERTILIZING

A. Fertilizer and lime shall be dressed evenly over the areas to be seeded using approved mechanical type spreading equipment.

B. Fertilizer and lime after spreading shall be immediately incorporated into the soil to a depth of approximately 2 inches, by chisel, spike tooth harrow, or other approved methods.

3.05 SEEDING METHODS

A. General methods:
The Contractor shall employ a satisfactory method of sowing by use of either approved mechanical hand seeders or mechanical power-driven drills. When delays in operation carry the work beyond the specified planting seasons, or when conditions are such that by reason of drought, high winds, excessive moisture, or other factors, satisfactory results are not likely to be obtained, seeding shall stop. It will be resumed only where the desired results are probable or when approved alternate procedures have been adopted.

B. Broadcast seeding:
When broadcast seeding is utilized, the seed shall be uniformly broadcast by mechanical hand seeder, in two directions at right-angles to each other and at 1/2 of the specified rate per acre in each direction. After the seed is broadcast it shall be covered by an approved method to a depth of 1/3 inch to 3/4 inch. Broadcast seeding shall not be done in windy weather.

C. Drill seeding:
When drilling is utilized, it shall be done with approved equipment best suited to perform the work under prevailing conditions. The seed shall be uniformly drilled to a depth of 1/3 inch to 3/4 inch at the rate per acre specified. Drill seeding may be required in windy weather.

D. Prior to start of seeding, the Contractor shall demonstrate that the application of seed is being made at the specified rate. A final check of the total quantity of seed used shall be made against the area seeded. If the check shows that the Contractor has not applied

seed at the specified rate, he shall uniformly distribute seed at a rate calculated to meet the shortage.

E. The Contractor shall maintain the seeded areas until all fertilizing, seeding, and mulching is complete and the work accepted by the Engineer. Areas damaged from the Contractor's own operations shall be repaired at his expense. After acceptance of the work the Contractor will not be held responsible for erosion due to weather, or conditions not due to the Contractor's own operations or negligence. The Contractor is not required to guarantee a crop, if seeding is done during the specified seeding periods.

3.06 MULCHING

A. Immediately after seeding, the Contractor shall apply vegetative mulch at a rate between 1½ and 2½ tons per acre to all seeded areas. Quantity of mulch shall be adjusted within the above limits, as directed by the Engineer, to the particular area or slope being mulched. Total application of mulch for the project shall average approximately 2 tons per acre. Mulch shall be applied by mechanical mulch spreaders equipped to eject by means of a constant air stream controlled quantities of the vegetative mulch.

B. Mulch shall be embedded by a disc type roller having flat serrated discs spaced not more than 10 inches apart, with cleaning scrapers for each disc.

C. Where indicated, or in areas of the project where soil conditions are not suitable for satisfactory crimping, asphalt emulsion shall be applied with the mulching operation. The normal rate of application shall be 100 gallons per ton of straw; however, this rate may be varied as directed by the Engineer to suit the particular area or slope conditions.

D. All mulch shall be distributed evenly over the areas to be mulched within 24 hours after the seeding operation. Following the mulching operation, suitable precautions shall be taken to prohibit traffic over mulched areas. Displaced mulch shall be replaced immediately, including repair of the underlying seed bed.

3.07 MAINTENANCE

A. The Contractor shall maintain all seeded areas until the grass is properly established (not less than 90 days) until satisfactory development. Maintenance shall be continued until final acceptance of the work.

B. Maintenance of seeded areas shall include protecting, watering, mowing, fertilizing, and such other work as may be necessary to establish a permanent lawn. The Contractor shall reseed those seeded areas in which a satisfactory growth is not obtained, and shall refill any areas which become eroded prior to final acceptance of the work.

C. Paved areas shall be kept clean while maintenance operations are in progress.

3.08 REPLACEMENT

A. The Contractor shall replace all trees, shrubs, and flowers damaged by construction activities in the areas designated on the construction plans. The replacement trees and shrubs shall be equal in size to the damaged or removed specimen.

END OF SECTION

B. WATER MAINS

PART 1 - GENERAL

1.01 SECTION INCLUDES

A. Ductile iron pressure pipe.

1.02 RELATED SECTIONS

A. Section 01020: Trenching, Backfilling, and Compaction

B. Section 02040: Valves, Hydrants, and Accessories

C. Section 02060: Disinfecting Water Mains

1.03 QUALITY ASSURANCE

A. Supervision:
1. Provide full time superintendent on the project who is qualified and experienced in the installation of ductile iron pipe.
2. The superintendent shall direct all work in the execution of this portion of the work to ensure proper and adequate installation.

B. Codes and standards:
Installation shall comply with specifications, AWWA C600 and manufacturer's recommendations.

1.04 SUBMITTALS

A. Shop Drawings:
Submit Shop Drawings to the Engineer within 30 days after award of Contract, showing all the materials to be furnished and installed.

B. As-Built Drawings:
During progress of the work, maintain an accurate record of all changes made in the plumbing installation from the layout and materials shown on the approved Shop Drawings.

PART 2 - PRODUCTS

2.01 MATERIALS

A. All piping and fittings shall be ductile iron pipe.

B. Pipe shall have slip joints or mechanical joints. Only one of the two joint types shall be used on this project.

C. All fittings shall be mechanical joints.

D. Four-inch diameter pipe shall be Class 51.

E. All 6, 8, 10, and 12 inch diameter pipe shall be Class 50.

F. All pipe and fittings shall have cement lining and bituminous coatings inside and outside.

G. All materials shall comply with the following specifications or the latest revisions thereof.

ANSI (A21.4)	(AWWA C-104)	Cement lining for cast iron pipe.
ANSI (A21.11)	(AWWA C-111)	Mechanical joints for cast iron and ductile iron pressure pipe and fittings.
ANSI (A21.10)	(AWWA C-110)	Short bodied fittings for water.
WW-P-421a	Type II	Roll-on rubber gasket joint cast iron pipe. Pipe size 12 inch and smaller.
ANSI (A21.51) ANSI (A21.50)	(AWWA C-151) (AWWA C-150)	Ductile Iron pipe
(AWWA C-100)	Cast iron pressure fittings.	

2.02 SERVICE CONNECTION

A. Service Saddle:
Service saddle shall be Rockwell 911 with stainless steel construction. Taps shall be CC for corporation stop.

PART 3 - EXECUTION

3.01 HANDLING

A. Pipe, fittings, and accessories shall be handled in a manner that will ensure their installation in the work in sound, undamaged condition. Equipment, tools, and methods used in unloading, reloading, hauling, and laying pipe and fittings shall be such that they are not damaged. Hooks inserted in ends of pipe shall have broad, well padded contact surfaces.

B. Pipe and fittings in which the cement lining has been broken or loosened shall be replaced by and at the expense of the Contractor. Where the damaged areas are small and readily accessible, the Contractor may be permitted to repair the lining, subject to the approval of the Engineer.

C. All pipe coating which has been damaged shall be repaired by the Contractor before installing the pipe.

3.02 CUTTING PIPE

A. Cutting of cast iron pipe shall be done in a neat manner, without damage to the pipe or to the cement lining therein. Pipe cuts shall be smooth, straight, and at right angles to the pipe axis. All cutting of pipe shall be done with mechanical pipe cutters of an approved type except that, in locations where the use of mechanical cutters would be difficult or impracticable, existing pipe may be cut with diamond point chisels, saws, or other tools which will cut the pipe without damaging impact or shock.

B. Cutting of ductile iron pipe shall be in accordance with the recommendations of the manufacturer.

3.03 CLEANING

A. The interior of all pipe and fittings shall be thoroughly cleaned of all foreign matter before being installed and shall be kept clean until the work has been accepted. All lumps, blisters, and excess coating shall be removed from exterior spigot and interior bell surfaces. Such surfaces shall be wire brushed and wiped clean and dry and free from oil and grease before placing the spigot in the bell. All joint contact surfaces shall be kept clean until the jointing is completed.

B. Every precaution shall be taken to prevent foreign material from entering the pipe while it is being installed. No debris, tools, clothing, or other material shall be placed in the pipe.

C. Whenever pipe laying is stopped, the open end of the line shall be sealed with a watertight plug. All water that may have entered the trench shall be removed prior to removing the plug. It is essential that no mud, trench water, or other foreign matter be permitted to enter the pipeline at any time.

3.04 INSPECTION

A. During installation, while suspended and hanging free, each pipe and fitting shall be inspected for defects and rung with a light hammer to detect cracks. All defective, damaged, or unsound pipe and fittings shall be rejected and removed from the site of the work.

3.05 ALIGNMENT OF BELL AND SPIGOT PIPE

A. Pipelines or runs intended to be straight shall be laid straight. Deflections from a straight line taken in joints shall not be greater than that recommended by the pipe manufacturer.

B. Either shorter pipe sections, or special bends, shall be installed where the alignment or grade requires them.

3.06 LAYING PIPE

A. Pipe shall be protected from lateral displacement by means of pipe embedment material installed as provided in the trench backfill specification.

B. Under no circumstances shall pipe be laid in water and no pipe shall be laid under unsuitable weather or trench conditions.

C. Pipe shall be laid with the bell ends facing the direction of laying except when making closures.

3.07 MECHANICAL JOINTS

A. Mechanical joints shall be carefully assembled in accordance with the manufacturer's recommendations. If effective sealing is not obtained, the joint shall be disassembled, thoroughly cleaned and reassembled. Overtightening bolts to compensate for poor installation practice will not be permitted.

3.08 BOLTLESS GASKETED JOINTS

A. All instructions and recommendations of the pipe manufacturer, relative to gasket installation and other jointing operations, shall be observed and followed by the Contractor. All joint surfaces shall be lubricated with heavy vegetable soap solution immediately before the joint is completed.

3.09 FLANGED JOINTS

A. When bolting flanged joints, care shall be taken to ensure that there is no restraint on the opposite end of the pipe or fitting which would prevent uniform gasket compression or which would cause unnecessary stress in the flanges. One flange shall be free to move in any direction while the flange bolts are being tightened. Bell and spigot joints shall not be packed or assembled until all flanged joints affected thereby have been tightened. Bolts shall be tightened gradually and at a uniform rate, in such a manner that gasket compression is uniform over the entire area of the gasket.

3.10 EXTENTION CONNECTIONS WITH EXISTING PIPE LINES

A. Where connections are made between new work and existing piping, such connections shall be made using suitable and proper fittings to suit the conditions encountered. Each connection with an existing water pipe shall be made at a time and under conditions which will least interfere with water service to customers affected thereby, and as authorized by the Owner. Suitable facilities shall be provided for proper dewatering, drainage, and disposal of all water removed from the dewatered lines and excavations, without damage to adjacent property.

B. Great care shall be taken to prevent pipeline contamination when dewatering, cutting into, and making connections with, existing pipelines used for the conveyance or distribution of water for domestic or public use. No trench water, mud, or other contaminating substance shall be permitted to get into the connected line or lines at any time during the progress of the work. The interiors of all pipe, fittings, and valves, both new and re-used, installed in such connections, shall be thoroughly cleaned and disinfected before installation.

- 24 hour advance notice of shutting off water.

3.11 SERVICE CONNECTIONS TO MAIN

All service connections to main shall be wet tap connections using service saddle and corporation stop.

3.12 REACTION ANCHORAGE AND BLOCKING

A. All unlugged bell and spigot or all-bell tees, Y-branches and bends deflecting 11-1/4 degrees or more which are installed in piping subjected to internal hydrostatic heads in excess of 15 feet in exposed, or 30 feet in buried, piping shall be provided with suitable reaction blocking, struts, anchors, clamps, joint harness, or other adequate means for preventing any movement of the pipe caused by unbalanced internal liquid pressure.

B. Trench installation:
Where in trench, the foregoing designated fittings shall be provided with concrete thrust blocking between the fitting and solid, undisturbed ground in each case, except where solid ground blocking support is not available. At the tops of slopes vertical angle bends shall be anchored by means of steel strap or rod anchors securely embedded in or attached to a mass of concrete of sufficient weight to resist the hydraulic thrust at the maximum pressures to which the pipe will be subjected. All concrete blocking and anchors shall be installed in such a manner that all joints between pipe and fittings are accessible for repair.

C. The bearing area of concrete reaction blocking against the ground or trench bank shall be as shown by the drawings or as directed by the Engineer in each case. In the event that adequate support against undisturbed ground cannot be obtained, metal harness anchorages consisting of steel rods or bolts across the joint and securely anchored to pipe and fitting or other adequate anchorage facilities approved by the Engineer shall be installed to provide the necessary support. Should the lack of a solid vertical excavation face be due to careless or otherwise improper trence excavation, the entire cost of furnishing and installing metal harness anchorages in excess of the contract value of the concrete blocking replaced by such anchorages shall be borne by the Contractor.

D. For other locations:
Reaction blocking, struts, anchorages, or other supports for fittings installed in fills or other unstable ground, above grade, or exposed within structures, shall be provided as required by the plans or as directed by the Engineer.

E. Protection of metal surfaces:
All steel clamps, rods, bolts, and other metal accessories used in reaction anchorages or joint harness subject to submergence or contact with earth or other fill material and not encased in concrete shall be adequately protected from corrosion with not less than two coats of Koppers "Bitumastic No. 50", or approved equal, heavy coal tar coating material, applied to clean, dry metal surfaces. The first coat shall be dry and hard before the second coat is applied. Metal surfaces exposed above grade or within structures shall be painted with two coats (in addition to a primer coat) of a paint approved by the Engineer.

END OF SECTION

PART 1 - GENERAL

1.01 SECTION INCLUDES

A. Polyethylene encasement.

1.02 RELATED SECTIONS

A. Section 01020: Trenching, Backfilling, and Compaction

B. Section 02010: Ductile Iron Pressure Pipe

1.03 QUALITY CONTROL

A. Supervision:
Provide full time supervisor trained and familiar with the work to be undertaken.

B. Workmanship:
All workmen shall be skilled and experienced in the specified work.

1.04 SUBMITTALS

A. Shop Drawings:
Submit Shop Drawings to the Engineer within 30 days after award of Contract.

PART 2 - PRODUCTS

2.01 MATERIALS

A. Polyethylene encasement materials shall be manufactured of virgin polyethylene in accordance with ASTM Specification D1248-68, or latest revision thereof.

B. Polyethylene tube material shall have a thickness of 0.008 inch (8 mils). The minus tolerance on thickness shall not exceed 10 percent of the nominal thickness.

C. The minimum tube size for each pipe diameter shall be as listed in Table 1. For pipe sizes greater than 24 inches, tube size may be determined by multiplying the nominal pipe diameter by 2.25 to obtain minimum flat tube width.

TABLE 1

NOMINAL PIPE DIAMETER (INCHES)	POLYETHYLENE FLAT TUBE WIDTH (INCHES)
4	16
6	20
8	24
10	27
12	30
14	34
16	37
18	41
20	45
24	53

D. Adhesive tape shall be a general purpose adhesive tape 1-inch wide and approximately 8 mils thick, such as Scotchtape No. 50, Pol. No. 900, Tapecoat CT or approved equal.

PART 3 - EXECUTION

3.01 INSTALLATION

A. General:
Polyethylene encasement shall be installed on pipe and fittings at location specified on the Drawings. Although not intended to be a completely air- and water-tight enclosure, the polyethylene shall prevent contact between the pipe and the surrounding backfill.

B. Pipe:
This standard includes two different methods for the installation of polyethylene encasement.

1. Method A:
   a. Cut polyethylene tube to a length approximately 2 feet longer than the length of the pipe section. Slip the tube around the pipe, centering it to provide a 1 foot overlap on each adjacent pipe section, and bunching it accordion-fashion lengthwise until it clears the pipe ends.
   b. Lower the pipe into the trench and make up the pipe joint with the preceding section of pipe. A shallow bell hole must be made at joints to facilitate installation of the polyethylene tube.

c. After assembling the pipe joint, make the overlap of the polyethylene tube. Pull the bunched polyethylene from the preceding length of pipe, slip it over the end of the new length of pipe, and secure in place with one circumferential turn of adhesive tape plus enough overlap to assure firm adhesion. Then slip the end of the polyethylene from the new pipe section over the end of the first wrap until it overlaps the joint at the end of the preceding length of pipe. Tape it in place. Take up the slack width to make a snug, but not tight, fit along the barrel of the pipe, securing the fold at quarter points with adhesive tape.

d. Repair any rips, punctures, or other damage to the polyethylene with adhesive tape or with a short length of polyethylene tube cut open, wrapped around the pipe, and secured with adhesive tape. Proceed with installation of the next section of pipe in the same manner.

2. Method B:

a. Cut polyethylene tube to a length approximately 1 foot shorter than the length of the pipe section. Slip the tube around the pipe, centering it to provide 6 inches of bare pipe at each end. Make polyethylene snug, but not tight. Tape down and secure ends as described in B,1.

b. Before making up a joint, slip a 3-foot length of polyethylene tube over the end of the preceding pipe section, bunching it accordion-fashion lengthwise. After completing the joint, pull the 3-foot length of polyethylene over the joint, overlapping the polethylene previously installed on each adjacent section of pipe by at least 1 foot. Make snug, tape down, and secure each end as described in B,1.

c. Repair any rips, punctures, or other damage to the polyethylene as described in B,1. Proceed with installation of the next section of pipe in the same manner.

C. Pipe-shaped appurtenances:
Bends, reducers, offsets, and other pipe-shaped appurtenances shall be covered with polyethylene in the same manner as the pipe.

D. Odd-shaped appurtenances:
Valves, tees, crosses, and other odd-shaped pieces which cannot practically be wrapped in a tube shall be wrapped with a flat sheet or split length of polyethylene tube. The sheet shall be passed under the appurtenance and brought up around the body. Seams shall be made by bringing the edges together, folding over twice, and taping down. Slack width and overlaps at

joints shall be handled as described in B,1. Tape polyethylene securely in place at valve stem and other penetrations.

E. Openings in encasement:
Openings for branches, service taps, blow-offs, air valves, and similar appurtenances shall be made by making an x-shaped cut in the polyethylene and temporarily folding the film back. After the appurtenance is installed, tape the slack securely to the appurtenance and repair the cut as well as any other damaged areas in the polyethylene with tape.

F. Junctions between wrapped and unwrapped pipe:
Where polyethylene wrapped pipe joins a pipe which is not wrapped, extend the polyethylene tube to cover the unwrapped pipe a distance of at least 2 feet. Secure the end with circumferential turns of tape.

END OF SECTION

PART 1 - GENERAL

1.01 SECTION INCLUDES

A. Polyvinyl chloride pressure pipe required for project.

1.02 RELATED SECTIONS

A. Section 01020: Trenching, Backfilling, and Compaction

B. Section 02040: Valves, Hydrants, and Accessories

C. Section 02060: Disinfecting Water Mains

1.03 QUALITY ASSURANCE

A. Supervision:
1. Provide full time superintendent on the project who is qualified and experienced in the installation of PVC pipe.
2. The superintendent shall direct all work in the execution of this portion of the work to ensure proper and adequate installation.

B. Codes and standards:
Installation shall comply with the applicable specifications of the AWWA and manufacturer.

1.04 SUBMITTALS

A. Shop Drawings:
Submit Shop Drawings to the Engineer within 30 days after award of Contract, showing all the plumbing system and plumbing materials to be furnished and installed.

B. As-Built Drawings:
During progress of the work, maintain an accurate record of all changes made in the plumbing installation from the layout and materials shown on the approved Shop Drawings.

PART 2 - PRODUCTS

2.01 FITTINGS - DUCTILE IRON O.D.

A. Ductile Iron Fittings shall be "push on joint" conforming to ANSI A21.10 (AWWA C110) or "mechanical joint" conforming to ANSI A21.10 (AWWA C110) and ANSI A21.11 (AWWA C111).

B. Fittings on pipe thru 12-inch size shall be compact type conforming to AWWA C153. All other sizes shall be normal dimension.

2.02 PLASTIC PIPE - DUCTILE IRON O.D.

A. The pipe shall be produced according to AWWA C900 specification for Class 150 psi. The pipe shall be produced by an extrusion process using resin complying with ASTM Specifications D1784-68. The pipe shall conform to all the requirements of Specifications AWWA C900-81 with a standard dimension ratio of DR of 18 for barrel, bell, or coupling. All pipe shall bear the AWWA seal of approval and designation. Certificates of compliance with these Specifications shall be furnished upon request.

B. Only elastomeric ring seals are to be used for joining pipes. Thrust blocks will be necessary at bends, tees, and reducers.

C. The elastomeric gaskets for plastic pressure pipe shall conform with the requirements of ASTM F477. The joint shall have been tested and approved by the National Sanitation Foundation and certification of said approval shall be submitted.

D. Prior to use, the Engineer shall be given opportunity for examination and testing. Any pipe found to be injured or damaged or to have defects shall be removed. The pipe shall then be delivered along the line in which the pipe is to be laid. The pipe shall be handled in a manner as recommended by the manufacturer so that minimum damage results.

PART 3 - EXECUTION

3.01 INSTALLATION

A. Maximum allowable bends in PVC pipe:

The following table gives the maximum distance from the center line of any length of PVC pipe to a chord line from the center of the joints at either end (mid-ordinate distance).

Pipe Size	20 Ft. Length	40 Ft. Length
1"	1.0′	4.0′
2"	0.5′	2.0′
3"	0.33′	1.33′
4"	0.25′	1.0′
6"	0.16′	0.67′
8"	0.125′	
10"	0.10′	
12"	0.082′	

Bends greater than the above require fittings. Use long radius elbow bends where possible.

B. Buried plastic piping shall be "snaked" in the trench and shall be kept as cool as possible during installation. Plastic pipe shall be kept shaded and shall be covered with backfill immediately after installation. Pipe shall be installed in accordance with manufacturer's instructions.

No rock or debris shall be placed in trench within 6 inches of the pipe.

C. The interior of all pipe and fittings shall be thoroughly cleaned of all foreign matter before being installed and shall be kept clean until the work has been accepted. All joint contact surfaces shall be kept clean until the jointing is completed.

D. Every precaution shall be taken to prevent foreign material from entering the pipe while it is being installed. No debris, tools, clothing, or other materials shall be placed in the pipe.

E. Whenever pipe laying is stopped, the open end of the line shall be sealed with a watertight plug. All water that may have entered the trench shall be removed prior to removing the plug. It is essential that no mud, trench water, or other foreign matter be permitted to enter the pipeline at any time.

F. Pipelines or runs intended to be straight shall be laid straight. Deflections from a straight line taken in joints or in pipe shall not be greater than that recommended by the pipe manufacturer.

G. Either shorter pipe sections or special bends shall be installed where the alignment or grade requires them.

H. Pipe shall be protected from lateral displacement by means of pipe embedment material installed as provided in the trench backfill specification.

I. Under no circumstances shall pipe be laid in water and no pipe shall be laid under unsuitable weather or trench conditions.

J. Pipe shall be laid with the bell ends facing the direction of laying except when making closures.

K. Mechanical joints shall be carefully assembled in accordance with the manufacturer's recommendations. If effective sealing is not obtained, the joint shall be disassembled, thoroughly cleaned and reassmebled. Overtightening bolts to compensate for poor installation practice will not be permitted.

L. Boltless gasketed joints shall be assembled following all instructions and recommendations of the pipe manufacturer, relative to gasket installation and other jointing operations, and shall be observed and followed by the Contractor. All joint surfaces shall be lubricated with heavy vegetable soap solution immediately before the joint is completed.

3.02 CONNECTIONS WITH EXISTING PIPE LINES

A. Where connections are made between new work and existing piping, such connections shall be made using suitable and proper fittings to suit the conditions encountered. Each connection with an existing water pipe shall be made at a time and under conditions which will least interfere with water service to customers affected thereby, and as authorized by the Owner. Suitable facilities shall be provided for proper dewatering, drainage, and disposal of all water removed from the dewatered lines and excavations, without damage to adjacent property.

B. Great care shall be taken to prevent pipeline contamination when dewatering, cutting into, and making connections with, existing pipelines used for the conveyance or distribution of water for domestic or public use. No trench water, mud, or other contaminating substance shall be permitted to get into the connected line or lines at any time during the progress of the work. The interiors of all pipe, fittings, and valves, both new and re-used, installed in such connections, shall be thoroughly cleaned and disinfected before installation.

3.03 REACTION ANCHORAGE AND BLOCKING

A. All unlugged bell and spigot or all-bell tees, Y-branches and bends deflecting 11-1/4 degrees or more which are installed in piping subjected to internal hydrostatic heads in excess of 15 feet in exposed or 30 feet in buried piping shall be provided with suitable reaction blocking, struts, anchors, clamps, joint harness, or other adequate means for preventing any movement of the pipe caused by unbalanced internal liquid pressure.

3.04 WATER MAIN LOCATION - AVOIDANCE OF POSSIBLE CONTAMINATION - Ks-DHE

A. The Contractor shall be alert to the following guidelines and rules and shall report immediately to the Engineer the possible or probable violation of the following rules and guidelines. The Engineer will consult with Kansas Health & Environment to determine the necessity of changes to the contract before work progresses.

1. A minimum distance of 25 feet shall be maintained between all potable water lines and all septic tanks, waste stabilization ponds, or open sewage discharge locations.
2. Under no circumstances shall a water line extend through a septic tank tile absorption field, or feedlot. All water lines shall be located a minimum of 25 feet from the farthest known extent of any sewage absorption.
3. A minimum horizontal distance of 10 feet shall be maintained between parallel water and sewer lines.
4. When it is necessary for any water line to cross a sewer line, the sewer line shall be constructed of cast iron or plastic pipe with solvent welded joints, 10 feet either side of the water line unless the water line is at least 2 feet clear distance above the sewer line.
5. When it is necessary for any water line to cross a sewer drain, including an open drain ditch, the sewage flow shall be encased in a cast iron or approved plastic pipe for at least 10 feet on each side of the water main.
6. Encasement of the water main through an area of real or potential pollution will not provide the protection needed to the water supply.

END OF SECTION

PART 1 - GENERAL

1.01 SECTION INCLUDES

A. Valves.

B. Fire hydrants.

C. Valve boxes.

D. Related items.

1.02 RELATED SECTIONS

A. Section 02010: Ductile Iron Pressure Pipe

B. Section 02030: Polyvinyl Chloride Pressure Pipe

1.03 QUALITY CONTROL

A. Supervision:
Provide full time supervisor trained and familiar with the work to be undertaken.

B. Workmanship:
All workmen shall be skilled and experienced in the specified work.

1.04 SUBMITTALS

A. Shop Drawings:
Submit Shop Drawings to the Engineer within 30 days after award of Contract.

PART 2 - PRODUCTS

2.01 VALVES

A. Gate valves 10 inches and smaller:
1. All gate valves shall comply with requirements of "Standard Specifications for Resilient Seated Gate Valves for Ordinary Water Works Service" AWWA C509 except as amended herein. All valves shall be resilient seated wedge type.
2. All gate valves shall have ends of standard mechanical joints conforming to ASA Spec. A21.11. Flanged end valves shall conform to ASA Spec. B16.1.
3. All gate valves shall be mounted in the line in a vertical position.
4. All gate valves shall be provided with "O" rings for sealing of the valve stem.

5. All gate valves shall be equipped with 2 inch square operating nuts. Valves shall close on clockwise rotations.
6. All valves shall be designed for operation at a working pressure of not less than 200 psi.

B. Butterfly valves 12 inches and larger:
1. Butterfly valves for buried service shall be Dresser Model 450. Valve shall be furnished to meet AWWA C504 Class 150B requirements.
2. Materials shall be:
   a. Body - Cast Iron ASTM A126, Class B.
   b. Shaft - Stainless Steel 18-8, Type 304
   c. Disc - Iron for AWWA 150B Service.
   d. Seat - Buna-N rubber stainless steel trimmed.
3. Operator:
   Buried valves shall be equipped with a suitably sized gear actuator and 2 inch square nut operator. The body shall have mechanical joint ends. Retainer glands are to be used when installed on DIP.

2.02 FIRE HYDRANTS

A. All fire hydrants shall comply with requirements of "AWWA Standard for Fire Hydrants for Ordinary Water Works Service" C-502 except as amended herein.

B. All hydrants shall have replaceable "breakable" sections. Hydrants shall be compression type closing with line pressure. Hydrants shall have inlet connection of 6 inch size with standard flange connection for direct bolting to auxiliary gate valve.

C. All hydrants shall have two hose outlets with National Standard 2 1/2 inch hose threads, and one 4 1/2 inch pumper connection with National Standard threads. Operating nut shall conform to National Standard measurements.

D. Valve opening shall be 5 1/4 inch.

E. Hydrant valve shall open on counter-clockwise rotation of the operating nut.

F. Hydrants shall be painted a finish coat of red above the ground line.

G. Burial depths for hydrants will and may vary, but shall not be less than 4 feet. The pumper connection shall not be less than 12 inches nor greater than 24 inches above finish grade. The Contractor shall furnish and install all spool pieces as may be necessary to adjust hydrants to the proper height.

2.03 VALVE BOXES

A. Traffic areas:
Valve boxes shall be Clay & Bailey, or equal, three-piece, slip type 5 1/4 inch shaft for roadway service. Cover shall have the word "Water" cast on its top.

B. Non-traffic areas:
Use 6 inch PVC Cl.160 and extend 24 inches above grade. Install Clay & Bailey 2194 cover and 1108 lid.

2.04 TAPPING SLEEVES

A. Tapping sleeves shall be as manufactured by the Mueller Co. or M & H Valve & Fitting Co. for 150 psi working pressure. Joints shall be mechanical joint suitable for the pipe to be tapped. Outlet shall be flanged ASA B 16.1.

B. Valves for tapping sleeves shall be as per 2.01 A in this section except that end connection shall be flanged and mechanical joint.

2.05 LOCATING WIRE

A. No. 14 THNN bare copper wire to be installed in the trench with the main.

2.06 SERVICE CONNECTIONS

A. Service pipe:
1. The pipe from the main to the meter holding device shall be 3/4 inch, 250 psi, PVC.
2. All service installed in highway right-of-way shall be Type K copper and subject to approval by the Kansas Department of Transportation.

B. Meter holding device:
1. The meter holding device shall provide a complete mounting for the installation of and the holding of the water meter so that the line of flow through the meter shall be 18 inches above the lower edge of the meter box.
2. The copper meter yoke shall be provided with an inverted ground key angle valve or shut-off valve on the inlet side. Each end of the yoke shall be provided with a combination tailpiece with inside I.P. thread. The yoke shall provide a copper, brass, or bronze passage entirely through the meter box with the exception of the meter. The construction shall be such that the meter may be removed without removing the meter holding device, and the footing or the discharge leg of the yoke shall extend at least 18 inches from the centerline of the meter box. Setter shall have a pack joint for PVC on each end. The meter holding device shall be a Ford Meter Box Co. Model VB71-21W-41-33G coppersetter, or approved equal.

C. Service saddle:
Service saddle for main line shall be Ford S71. Corporation stop shall be 3/4 inch CC x 3/4 inch pack joint for PVC.

D. Service meter:
1. Meters furnished under these Specifications shall be product of a manufacturer with at least 5 years experience in meter manufacturing for the American Water Works market. Meter shall be of the positive displacement type for cold water service, of split-case design with provision for frost protection and must be either notating disk or oscillating piston type.
2. Meters shall comply with A.W.W.A. Standard C700-64 for accuracy, capacity, pressure loss and dimensions.
3. Meters may be either mechanically or magnetically driven with sealed registers. Meters with stuffing box, spindle, and packing gland will not be acceptable.
4. Meters shall be readily adaptable to remote readout capability designed and manufactured for the brand of meter being bid.
5. Meters shall carry a minimum 5 year warranty against defective materials and workmanship and shall be Kent C.700, Rockwell, Neptune, or approved equal.
6. The body cases shall be of high quality bronze with the manufacturer's serial number imprinted thereon and have raised markings to indicate the direction of flow.
7. A hinged cover bearing the name of the manufacturer in raised letters shall be provided for the register glass. Thread protectors shall be supplied for the connection ends and the cases shall have provisions for wire sealing the meter body. Cases must be capable of withstanding working pressures of 150 psi.
8. Registers shall be straight-reading in cubic feet, sealed to prevent fogging and to prevent fluid contact with water being measured and with provision for test reading the flow to within 0.1 gallon. Register components shall be constructed of corrosion resistant material.

E. Meter box:
The meter box to be used shall be of PVC Plastic, 18 inch in diameter and not less than 36 inches in length. Boxes shall be "Sono-Loc" as manufactured by SONOCO Company, Hartsville, S.C. or approved equal.

F. Meter box cover:
1. The meter box covers shall be of cast iron construction of a good quality cast iron at least 50 percent of which shall be new pig. It shall be constructed to fit on the meter box with lugs extended into the box to prevent displacement of the cover. Cover shall be Clay & Bailey, D2210 with lifting lugs or approved equal.
2. The lid shall be held to the body with lugs. The box cover shall be not less than 4 inches high.

G. Cover:
The trench for service lines shall provide not less than 36 inches of cover and shall be not less than 6 inches in width.

H. Meter box location:
Excavation for the meter boxes shall be made at the location indicated by the Engineer.

I. Boring under street roadways for service connections:
Where it is necessary to go under streets and paved roadways with service connections, it will be accomplished by boring unless special permission for trenching is secured.

2.07 CAP EXISTING SERVICE TAP

A. Materials:
Materials to be used to cap an existing service line connection at the main shall be a Smith-Blair 242 repair clamp with stainless steel bolt.

PART 3 - EXECUTION

3.01 VALVES AND VALVE BOXES

A. Valves and valve boxes shall be set plumb. Each valve box shall be placed directly over the valve it serves, with the top of the box brought flush with the finished grade. After being placed in proper position, earth shall be filled in around each valve box and thoroughly tamped for a distance on each side of the box of 4 feet at the top of the pipe and 2 feet measured at the top of the trench.

B. Each valve shall be inspected before installation to ensure that all foreign substances have been removed from within the valve body, and shall be opened and closed to see that all parts are in first-class working condition.

3.02 FIRE HYDRANTS

A. Hydrants shall be set at such an elevation that the minimum pipe cover is provided throughout the length of the branch supply line and that the nozzles are at least 12 inches and not more than 24 inches above the ground.

B. Each hydrant shall be set on a concrete foundation not less than 18 inches square and 6 inches thick. To prevent the hydrant from blowing off the supply connection, the bowl of each hydrant shall be blocked against the end of the trench with concrete thrust blocks.

C. Hydrant drainage shall be provided by installing around the hydrant, and below the top of the hydrant supply pipe, not less than 7 cubic feet of a mixture of two parts gravel or crushed stone retained on a 3/4 inch screen to one part of coarse sand.

D. All hydrants shall stand plumb. Hydrants with pumper nozzles shall have their hose nozzles parallel with, and the pumper nozzle perpendicular to, the curb line. Hydrants having hose nozzles 90 degrees apart shall be set so that the line bisecting the angle between the nozzles is perpendicular to the curb line. Hydrants located behind curbs where the sidewalks extend close to, or abut against, the curb shall be set that no portion of the pumper or hose nozzle caps will be less than 6 inches nor more than 12 inches from the gutter face of the curb. Where set in a parking between the curb and sidewalk, or between the sidewalk and property line, no portion of the hydrant or nozzle cap shall be within 6 inches of the sidewalk.

E. Immediately before installation of a hydrant, the following operations shall be performed: (a) the hydrant shall be carefully inspected; (b) the hydrant interior shall be thoroughly cleaned; (c) the hydrant shall be opened and closed as many times as may be necessary to determine if all parts are in proper working order with valves seating properly and the drain valve operating freely; and (d) the packing gland checked to determine if the packing is in place and the gland nut properly tightened.

END OF SECTION

PART 1 - GENERAL

1.01 SECTION INCLUDES

A. Testing of water lines, fire hydrants and valves.

1.02 RELATED SECTIONS

A. Section 01020: Trenching, Backfilling, and Compaction

B. Section 02010: Ductile Iron Pressure Pipe

C. Section 02030: Polyvinyl Chloride Pressure Pipe

D. Section 02040: Valves, Hydrants, and Accessories

E. Section 02060: Disinfecting Water Mains

1.03 QUALITY CONTROL

A. Supervision:
Provide full time superintendent on the project who is qualified and experienced in testing procedures. Superintendent shall direct all work in connection with the testing.

B. Codes and standards:
Testing shall comply with AWWA C600-77 Section 4- Hydrostatic Testing.

1.04 SUBMITTALS

Test reports:
Submit certified copies of test reports on each section of pipe tested.

PART 2 - PRODUCTS

None

PART 3 - EXECUTION

3.01 GENERAL

A. The Contractor shall provide all necessary piping connections, pumping equipment, pressure gages, flow meters, and other equipment as necessary for the required test.

B. Pressure and leakage test may be coordinated with the disinfection of the pipeline, subject to conditions of Section 02675 - "Disinfecting Water Mains."

C. The Owner will furnish at the nearest available source, all water required for filling the lines and making the required test. The pipe shall be filled with water at a velocity not to exceed one fps (foot per second). Air shall be expelled from the pipeline during filling.

D. Where practical, pipelines shall be tested in lengths of not more than 1500 feet.

E. All pipe, fittings, and other materials found to be defective, shall be removed and replaced with new materials by the Contractor.

F. All lines that fail to meet tests shall be repaired and retested as necessary until test requirements are complied with.

G. Testing before backfilling in no way relieves the Contractor of the responsibility of repairing leaks which become evident after the main is put into service, during the Contract, or one-year guarantee period.

3.02 TESTING BEFORE BACKFILL

A. All backup blocks and anchors shall have been in place at least 48 hours prior to testing.

B. The test pressure shall be maintained for 2 hours or longer as is necessary for time to inspect the pipeline for visible leaks and as is required to obtain a reasonable time for leakage measurement.

3.03 PRESSURE TEST

A. Test pressure:
   1. All newly installed piping shall be hydrostatic pressure tested at 150 psi for at least a 2 hour duration.
   2. Pressure shall not vary by more than plus or minus 5 psi.

3. Pressurization:
Each valved section of pipe shall be filled with water slowly and the specified test pressure, based on the elevation of the lowest point of the line or section under test and corrected to the elevation of the test gage, shall be applied by means of a pump connected to the pipe. Test shall begin after pipe is filled with water and the air expelled.

B. Air removal:
Before applying the specified test pressure, air shall be expelled completely from the pipe, valves, and hydrants. If permanent air vents are not located at all high points, the Contractor shall install corporation cocks at such points so that the air can be expelled as the line is filled with water. After all the air has been expelled, the corporation cocks shall be closed and the test pressure applied. At the conclusion of the pressure test, the corporation cocks shall be removed and plugged, or left in place at the discretion of the Owner.

C. Examination:
All exposed pipe, fittings, valves, hydrants, and joints shall be examined carefully during the test. Any damage or defective pipe, fittings, valves, or hydrants that are discovered following the pressure test shall be repaired or replaced with sound material and the test shall be repeated until it is satisfactory to the Owner.

3.04 LEAKAGE TEST

A. General:
A leakage test shall be conducted concurrently with the pressure test.

B. Leakage defined:
Leakage shall be defined as the quantity of water that must be supplied into the newly laid pipe, or any valved section thereof, to maintain pressure within 5 psi of the specified test pressure after the air in the pipeline has been expelled and the pipe has been filled with water.

C. Allowable leakage:
1. No pipe installation will be accepted if the leakage is greater than that determined by the following formula:

$$L = \frac{ND\ (0.08)P}{7400}$$

in which L is the allowable leakage, in gallons per hour; N is the number of joints in the length of pipeline tested; D is the nominal diameter of the pipe, in inches; and P is the average test pressure during the leakage test, in pounds per square inch gage.

2. Allowable leakage in gallons per hour at 150 psi per 1000 feet in 18 foot nominal lengths. For 20 foot nominal lengths, multiply the leakage calculated from table by 0.9.

Pipe Size	Allowable Leakage
2	0.19
3	0.28
4	0.37
6	0.55
8	0.74
10	0.92
12	1.10
14	1.29
16	1.48
18	1.67
20	1.85
24	2.22

3. When testing against closed metal-seated valves, an additional leakage per closed valve of 0.0078 gallons per hour per inch of nominal valve size shall be allowed.
4. When hydrants are in the test section, the test shall be made against the closed hydrant.
5. All visible leaks shall be repaired regardless of the amount of leakage.

D. Acceptance of installation:
Acceptance shall be determined on the basis of allowable leakage. If any test of pipe laid discloses leakage greater than that specified, the Contractor shall, at his own expense, locate and repair the defective material until the leakage is within the specified allowance.

END OF SECTION

PART 1 - GENERAL

1.01 SECTION INCLUDES

A. Disinfecting water lines and determining the bacteriologic quality by laboratory test after disinfection.

1.02 RELATED SECTIONS

A. Section 01020: Trenching, Backfilling, and Compaction

B. Section 02010: Ductile Iron Pressure Pipe

C. Section 02030: Polyvinyl Chloride Pressure Pipe

D. Section 02040: Valves, Hydrants, and Accessories

1.03 QUALITY CONTROL

A. Supervision:
Provide full time superintendent on the project who is qualified and experienced in disinfection procedures. Superintendent shall direct all work in connection with the disinfection.

B. Codes and standards:
Testing shall comply with AWWA C601.

1.04 SUBMITTALS

A. Test reports:
Submit certified copies of test reports on each section of pipe tested.

PART 2 - PRODUCTS

2.01 CHLORINE

A. Calcium hypochlorite (70% available chlorine).

PART 3 - EXECUTION

3.01 FLUSHING

A. Water lines shall be flushed prior to disinfection at a velocity of not less than 2.5 feet per second.

B. Discharge point shall have adequate drainage to prevent flooding of surrounding area. Discharge point to be approved by Owner.

3.02 CHLORINE APPLICATION

A. Continuous feed method:
1. This method is suitable for general application.

TABLE 2

Chlorine Required to Produce 50 mg/l Concentration in 100 ft. of Pipe - by Diameter

Pipe Size in.	100 percent Chlorine lb.	1 percent Chlorine Solutions gal.
4	0.027	0.33
6	0.061	0.73
8	0.108	1.30
10	0.170	2.04
12	0.240	2.88
14	0.334	4.01
16	0.436	5.24
18	0.552	6.63
24	0.981	11.78
30	1.533	18.40

2. Water from the existing distribution system or other approved sources of supply shall be made to flow at a constant, measured rate into the newly-laid pipeline. The water shall receive a dose of chlorine, also fed at a constant, measured rate. The two rates shall be proportioned so that the chlorine concentration in the water in the pipe is maintained at a minimum of 50 milligrams per liter available chlorine. To assure that this concentration is maintained, the chlorine residual should be measured at regular intervals in accordance with the procedures described in the current edition of Standard Methods and AWWA M12 - Simplified Procedures for Water Examination.
3. In the absence of a meter, the rate may be determined either by placing a pitot gage at the discharge or by measuring the time to fill a container of known volume.

4. Table 2 gives the amount of chlorine residual required for each 100 feet of pipe of various diameters. Solutions of 1 percent chlorine may be prepared with sodium hypochlorite or calcium hypochlorite. The latter solution requires approximately 1 pound of calcium hypochlorite in 8.5 gallons of water.
5. During the application of the chlorine, valves shall be manipulated to prevent the treatment dosage from flowing back into the line supplying the water. Chlorine application shall not cease until the entire main is filled with the chlorine solution. The chlorinated water shall be retained in the main for at least 24 hours, during which time all valves and hydrants in the section treated shall be operated in order to disinfect the appurtenances. At the end of this 24 hour period, the treated water shall contain no less than 25 milligrams per liter chlorine throughout the length of the main.

3.03 FINAL FLUSHING

A. After the applicable retention period, the heavily chlorinated water shall be flushed from the main until the chlorine concentration in the water leaving the main is no higher than that generally prevailing in the system, or less than 1 milligram per liter. Chlorine residual determination shall be made to ascertain that the heavily chlorinated water has been removed from the pipeline.

3.04 BACTERIOLOGIC TEST

A. After final flushing, and before the water main is placed in service, a sample or samples shall be collected from the end of the line and tested for bacteriologic quality and shall show the absence of coliform organisms. If the number and frequency of samples is not prescribed by the public health authority having jurisdiction, at least one sample shall be collected from chlorinated supplies where a chlorine residual is maintained throughout the new main. From unchlorinated supplies at least two samples shall be collected at least 24 hours apart.

B. In the case of extremely long mains, it is desirable that samples be collected the length of the line as well as at its end.

C. Samples for bacteriologic analysis shall be collected in sterile bottles treated with sodium thiosulphate. No hose or fire hydrant shall be used in collection of samples. A suggested sampling tap consists of a standard corporation cock installed in the main with a copper tube gooseneck assembly. After samples have been collected the gooseneck assembly may be removed, and retained for future use.

3.05 REPETITION OF PROCEDURE

A. If the initial disinfection fails to produce satisfactory samples, disinfection shall be repeated until satisfactory samples have been obtained. When the samples are satisfactory, the main may be placed in service.

END OF SECTION

C. SEWER MAINS

PART 1 - GENERAL

1.01 SECTION INCLUDES

A. Sewer pipe.

B. Fittings.

1.02 RELATED SECTIONS

A. Section 01020: Trenching, Backfilling, and Compaction

B. Section 01030: Bored Excavation

1.03 QUALITY ASSURANCE

A. Compliance with specifications:
   1. Furnish proof acceptable to the Owner, when called for during construction, that all sewer pipe installed equal or exceed all requirements specified for this work.
   2. If such proof is not submitted or is unacceptable, replace all such items to conform to the specifications, and repair any damage, all at no cost to the Owner.

1.04 SUBMITTALS

A. Shop Drawings:
Submit Shop Drawings to the Engineer within 30 days after award of Contract showing all materials to be furnished and installed.

B. As-Built Drawings:
During progress of the work, maintain an accurate record of all changes made in the sewer pipe installation from the layout and materials shown on the approved Shop Drawings.

PART 2 - PRODUCTS

2.01 PIPE MATERIAL

A. Pipe material used on the Project shall be ductile iron or sewer pipe. Sewer pipe is defined as including vitrified clay pipe, ABS plastic sewer pipe, PVC gravity sewer pipe, PVC pressure sewer pipe, ductile iron pipe, or concrete pipe.

B. Sewer pipe which is 15 inches in diameter or smaller may be vitrified clay pipe (VCP), ABS plastic sewer pipe, or PVC gravity sewer pipe. The 4 inch house service lines may be VCP, PVC, or ABS pipe.

C. The force main pipe shall be PVC or DIP.

2.02 PIPE JOINTS

A. Pipe joints on new construction shall be standard joints for pipe material used. Where joining new pipe to existing old pipe 12 inches in diameter and smaller at various sewer replacements, and joining pipes of different material, rubber couplings shall be used. Couplings shall be heavy duty rubber, with two stainless steel clamps, and one stainless steel shear ring. Transition bushings of proper size shall be used for joining DIP to VCP or PVC pipe.

B. For joining old to new pipe in sizes larger than 12 inches diameter, where rubber couplings described above are not available, use standard concrete collars.

2.03 SEWER PIPE

A. Vitrified clay pipe:
1. Pipe and fittings shall be in accordance with the following standard specifications:

a.	Standard Strength	ASTM C13
b.	Extra Strength	ASTM C200 or ASTM C700
c.	Testing	ASTM C301

2. Vitrified clay pipe shall be plain end pipe conforming to dimensional and strength requirements of ASTM C200, latest revision. Pipes shall be joined using a compression sleeve manufactured to conform to ASTM Specification, C425-86, Type B, latest revision.

B. Plastic gravity sewer pipe (PVC):
1. PVC sewer pipe and fittings shall meet the requirements of ASTM specification D3034 (SDR 35), Type PSM polyvinyl chloride (PVC) sewer pipe and fittings.
2. All pipe and fittings shall be made from PVC components as defined and described in ASTM D1784 for Rigid Polyvinyl Chloride compounds and chlorinated Poly Compounds.
3. Gaskets shall meet the requirements of ASTM F744.

C. Force main pipe (PVC pressure pipe):
1. PVC pipe shall conform to all requirements of commercial standard CS-256-63, ASTM D2241-68 and be pressure rated at 200 psi with standard dimension ratio (SDR) of 21 for barrel, bell or coupling. Pipe shall bear the National Sanitation Foundation seal of approval and will comply with the requirements for Type 1, Grade 1 (PVC 1120) of ASTM D1784-68. Certificate of compliance shall be furnished with material.

2. Joints - All joints of both pipe and fittings shall comply with ASTM Specification D3139, Joints for Plastic Pressure Pipes Using Flexible Elastomeric Seals. Joint bells shall be formed integrally with the pipe or fitting and shall have a raceway or groove which is specially formed to accept and retain the gasket. Pipe spigots shall be beveled and shall have insertion stop marks. Qualification tests of the joint design shall result in no leakage under various laboratory test conditions of joint alignment and pressure at 2-1/2 times rated pressure.
3. Gaskets - Gaskets shall be molded from a high grade, properly vulcanized, elastomeric compound consisting of either a basic natural or synthetic rubber. Gaskets shall be marked to show IPS for pressure rated pipe, nominal pipe size, manufacturer's identification, and year of manufacture. Gaskets shall be color striped on the side of the gasket that faces the open bell to facilitate proper installation. Gaskets shall comply with the requirements of ASTM Specification F477, Elastomeric Seals (Gaskets) for Joining Plastic Pipes.
4. Lubricant - Lubricant shall be suitable for use at temperatures from 5 to 120 degrees F (-15 to 50 degrees C). It shall have no deteriorating effect on the gasket or pipe material. It shall be non-toxic and not support the growth of bacteria, and shall be water soluble. Containers shall be labeled with the manufacturer's name and identified as PVC pipe joint lubricant. Each lubricant container shall have printed instructions for usage and joint assembly.
5. Fittings - Fittings 4 inches and smaller shall be PVC with push-on joints. Fittings 6 inches and larger shall be cast iron with mechanical joint ends conforming to ANSI 21.11 except gaskets shall be duck tip transition type.

D. Ductile iron pipe:
1. Ductile iron pipe shall be manufactured and tested in accordance with ASA specification A21.51-1976. Iron shall be 60/42/10.
2. Pipe for sewers and force mains shall be bituminous coated inside and outside with no cement lining unless otherwise approved by Engineer in writing.
3. Thickness class shall be Class 50.
4. Pipe joints shall be boltless gasketed type, American "Fastite", Clow "Bell-Tite", U.S. "Tyton" or equal.
5. Fittings shall be short body mechanical joint cast iron. Manufacturing and testing shall be in accordance with ASA Specification A21.10. Iron shall be in accordance with ASTM A48. Thickness shall be in accordance with AWWA C100, Class D. Fittings shall be bituminous coated inside and out.

E. Reinforced concrete sewer pipe:
1. Concrete sewer pipe shall comply with the ASTM C76 latest edition. Wall thickness shall not be less than Wall B, Class IV or V.

2. Material:
   a. Fine Aggregate:
      Clean natural sand, ASTM C33. Artificial or manufactured sand will not be acceptable.
   b. Cement:
      ASTM C150,Containing not more than 5 percent triacalcium aluminate.
   c. Gaskets:
      ASTM C361, Sections 6.9.1 except polymer shall be synthetic rubber. Natural rubber will not be acceptable.
3. Reinforcement:
   a. Circumferential reinforcement shall be full circle type. Elliptical or part-circle reinforcement will not be acceptable.
   b. Longitudinal steel shall be spaced uniformly around the pipe and shall consist of at least eight continuous or lap spliced wires or bars in each cage.
   c. All reinforcing shall have at least a 1 inch concrete cover (no minus tolerance). Pipe with less than 1 inch cover at any point shall be rejected.
   d. Minimum length of lap splices of welded wire fabric shall conform to ASTM C76 latest edition.
   e. Extra joint reinforcement shall be provided as required due to the design joint load as shown in this Specification. The end circumferential bar shall be placed 1 inch minimum from the face of the joint.
4. Proof of Design Tests:
   a. The design of each class of concrete pipe shall be verified by tests conducted on representative specimens. Test shall be performed on pipe manufactured for this project. Certified test reports shall be submitted.
   b. The proof of design tests shall be:
      THREE EDGE BEARING: Each three edge bearing test shall determine the load required to produce:
      (1) Incipient cracking (first visible crack).
      (2) First 0.01 inch crack.
      (3) Ultimate destruction of the pipe.
   c. Conduct of three-edge bearing tests shall be as specified in ASTM C497.
5. Delivery:
   No concrete sewer pipe shall be delivered to the site of work until concrete control cylinders representing such pipe have attained a compressive strength of at least 80 percent of the specified minimum 28-day strength.

PART 3 - EXECUTION

3.01 HANDLING

A. Pipe and accessories shall be handled in a manner that will ensure their installation in the work in sound, undamaged condition. Equipment, tools, and methods used in unloading, reloading, hauling, and laying pipe and fittings shall be such that they are not damaged. Hooks inserted in ends of pipe shall have broad, well padded contact surfaces.

B. Pipe having premolded joint rings shall be handled in such a manner that no weight, including the weight of the pipe itself, will bear on or be supported by the spigot rings at any time. Care shall be taken to avoid dragging the spigot ring on the ground or allowing it to come in contact with gravel, crushed stone, rocks, or other hard objects. Joint rings which have been damaged in any way will not be accepted and shall not be incorporated in the work.

3.02 LAYING PIPE

A. Pipe shall be protected from lateral displacement by means of pipe embedment material installed as provided in trench backfill specification. Under no circumstances shall pipe be laid in water and no pipe shall be laid under unsuitable weather or trench conditions.

B. When jointed in the trench, the pipe shall form a true and smooth line. Pipe shall not be trimmed except for closures and pipe not making a good fit shall be removed. Permissible defects shall be placed in the top of the pipe.

C. Unless otherwise approved by the Engineer, the laying of pipe shall begin at the lowest point, and the pipe shall be installed so that the spigot ends point in the direction of flow.

D. Pipe which is a part of a gravity sewer line shall be aligned and constructed to grades set by the Engineer.

E. Pipe lines or runs intended to be straight shall be laid straight.

F. During installation, while suspended and hanging free, each pipe and fitting shall be inspected for defects and rung with a light hammer to detect cracks. All defective, damaged, or unsound pipe and fittings shall be rejected and removed from the site of the work.

3.03 ALIGNMENT AND GRADE

A. All pipe shall be laid straight between changes in alignment and at a uniform grade between changes in grade. All lines shall be laid so that each section between manholes will lamp.

3.04 JOINTING

A. Factory-molded plastic joints:
All instructions and recommendations of the pipe manufacturer shall be observed and followed. All joint surfaces shall be lubricated with the lubricant furnished by the pipe manufacturer immediately before the joint is completed.

B. Boltless gasketed joints:
All instructions and recommendations of the pipe manufacturer, relative to gasket installation and other jointing operations, shall be observed and followed by the Contractor. All joint surfaces shall be lubricated with heavy vegetable soap solution immediately before the joint is completed.

C. Mechanical joints:
Mechanical joints shall be carefully assembled in accordance with the manufacturer's recommendations. If effective sealing is not obtained, the joint shall be disassembled, thoroughly cleaned and reassembled. Overtightening bolts to compensate for poor installation practice will not be permitted.

D. Coupling pipe:
Couplings shall be chemically welded to the pipe with one end, factory applied. The coupling and pipe end to be chemically welded in the trench shall be thoroughly cleaned after it is in the trench and a primer and cement shall be applied to both the coupling and the end of the pipe. This shall be done in accordance with the manufacturer's instructions. The pipe shall be thoroughly shoved into the coupling and then turned within the coupling one-quarter turn to ensure complete contact between cement, pipe, and coupling.

E. Concrete pipe joints:
1. Joints for reinforced concrete pipe shall be rubber and concrete. Rubber and concrete joints shall be formed entirely of concrete, with the spigot grooved to receive an O-ring type rubber gasket. Joints shall conform to Section 8 of ASTM C361.
2. Each joint shall be designed and reinforced to withstand the gasket compression, plus a differential load across the joint equal to 4,000 pounds per foot of internal diameter. In resisting gasket compression, the concrete in the bell shall not be stressed higher than 150 psi by the combined tension and diagonal tension stresses. The end of the last circumferential reinforcing rod in both the bell and the spigot ends shall be welded to form a full circle.
3. In computing the stresses in the bell, a gasket pressure of 150 pounds per linear inch shall be used. The gasket size, compression, and stretch shall be selected to limit the gasket pressure to 150 pounds per linear inch with a gasket hardness of 45.
4. Joint design details shall be submitted for acceptance together with data or test results verifying the adequacy of joint design and gasket. Historical test reports will be adequate for proof-of-design.

5. Rubber gaskets shall conform to the requirements of Section 5.9.1 of ASTM C361, shall have a circular cross section, and shall have a hardness when measured by ASTM D2240, Type A Durometer of 40 plus or minus 5.

3.05 CUTTING PIPE

A. Cutting of pipe shall be done in a neat manner, without damage to the pipe or to the lining therein. Pipe cuts shall be smooth, straight, and at right angles to the pipe axis. All cutting of pipe shall be done with mechanical pipe cutters of an approved type except that in locations where the use of mechanical cutters would be difficult or impracticable, existing pipe may be cut with diamond point chisels, saws, or other tools which will cut the pipe without damaging impact or shock.

3.06 CLEANING

A. The interior of all pipe shall be cleaned of all foreign matter before being installed and shall be kept clean until the work has been accepted. All lumps, blisters, and excess coating shall be removed from exterior spigot and interior bell surfaces. Such surfaces shall be wire brushed and wiped clean, dry, and free from oil and grease before placing the spigot in the bell. All joint contact surfaces shall be kept clean until the jointing is completed.

B. Every precaution shall be taken to prevent foreign material from entering the pipe while it is being installed. No debris, tools, clothing, or other materials shall be placed in the pipe.

C. Whenever pipe laying is stopped, the open end of the line shall be sealed with a watertight plug.

3.07 TESTING

A. General:
1. All sewers shall be visually inspected, infiltration leakage tested, and exfiltration leakage tested. At the Contractor's option and with approval of the methods by the Engineer, the Contractor may provide air leakage testing in substitution for the exfiltration test.
2. The Contractor shall furnish all labor, equipment, tools, materials, and water, and shall perform all acceptance tests.
3. All tests are to be witnessed and recorded by the Engineer.

B. Visual inspection:
1. All pipe shall be cleaned of excess mortar, dirt, and debris prior to visual inspection. The sewer shall be inspected by flashing a light between manholes and/or by physical passage where space permits. Determine by illumination and/or physical inspection the presence of any misaligned, displacement, or broken pipe and the presence of visable infiltration and other defects.
2. Correct defects prior to conducting leakage tests.

C. Leakage tests:
1. The leakage tests shall be performed on the full length of all sewer lines prior to acceptance.
   a. Infiltration leakage test:
      (1) All sections of sewer lines shall be checked for infiltration. At each manhole where flow exists in the pipe, measurements shall be made to determine the quantity by capture or by inserting "V" notch weirs in the pipe.
      (2) Repair leaks and defects until the leakage, as measured, in any section does not exceed 200 gallons per inch of pipe diameter per day per mile of pipe. (0.15 gallons per inch of pipe diameter per hour per 100 feet of pipe).
      (3) The infiltration check and repairs shall be completed on any section prior to making the exfiltration test.
   b. Exfiltration leakage test:
      (1) All sections of sewer lines shall be tested by exfiltration on the sewer pipe and manholes. Exfiltration tests shall be conducted by blocking off all manhole openings except those connected to the section being tested, filling the line with water, and measuring the water required to maintain a constant level in the manholes. During the test, the average water depth above the pipe invert shall be 10 feet, unless manhole depths are such that it is not possible. Maximum depth at the lower end shall not exceed 25 feet and minimum depth at the upper end shall be at least 5 feet above the crown of the pipe.
      (2) Maintain test as necessary to determine leakage but not less than 2 hours. Repeat as necessary after repairs until leakage does not exceed 200 gallons per inch of pipe diameter per day per mile of pipe. (0.15 gallon per inch of pipe diameter per hour per 100 feet of pipe).
      (3) For the purposes of determining the maximum allowable leakage, manholes shall be considered as sections of pipe of the diameter and height of the manhole.

c. Air leakage testing:

(1) The Contractor, at his option, may perform low pressure air testing of the sewer lines in substitution for the Exfiltration testing, with approval of equipment and methods by the Engineer.

(2) The general testing procedure shall be as follows: Raise pressure to 4.0 psi, throttle the air supply to maintain between 4.0 and 3.5 psi for at least two minutes in order to allow equilibrium between air temperature and pipe walls to be reached. After temperature has stabilized, allow the pressure to decrease to 3.5 psi. At 3.5 psi begin timing to determine the time required for pressure to drop to 2.5 psi. If the time, in seconds, for the air pressure to decrease from 3.5 to 2.5 psi is greater than that shown in the table below, the pipe shall be presumed free of defects.

Pipe Size	Required Time per 100 L.F.
8"	70 sec.
10"	110 sec.
12"	158 sec.
15"	248 sec.
18"	356 sec.
21"	485 sec.
24"	634 sec.
27"	765 sec.
30"	851 sec.
33"	935 sec.

(3) If air test fails to meet above requirements, repeat test as necessary after all leaks and defects have been repaired.

(4) In areas where ground water is known to exist, increase the test pressure by 0.43 psi for each foot of depth that the ground water is above the top of the pipe.

3.08 DEFLECTION TEST PVC PIPE (GRAVITY SEWER PIPE)

A. Deflection tests shall be performed on all flexible pipe when ordered by the Project Engineer. The deflection tests shall be completed after leakage testing has been completed. No pipe deflection shall exceed 5 percent.

B. The deflection test shall be run using a rigid ball or mandrel with a diameter equal to 95 percent of the inside diameter of the pipe.

C. The Contractor is responsible for providing the personnel and equipment necessary to run the tests. The project representatiave or inspector shall observe test and record testing information in the permanent record.

3.09 WYE BRANCHES AND STUB LINES

A. At locations designated during construction, the Contractor shall install 4 inch wyes and riser pipes or stub lines. Wye branches shall be so installed that the lower lip of the branch is no more than 2 inches below the outside top of the pipe.

B. Stub lines shall be the same size and type of pipe as the wye branch or tee. The end of the stub line shall be closed by means of a suitable stopper held in place by joint sealing compound.

C. The stub lines shall be laid to the line and grade set by the Engineer or Construction Representative. The stub lines shall extend to the property line of the house being served.

D. The ends of the stub lines shall be marked by a 1 by 2 inch wooden strip extending from the end of the pipe to within 1 foot of the top of the surface of the ground. Markers shall be securely anchored and maintained in proper position until backfill has been completed. Markers shall be referenced to at least 3 points of permanent reference and tie distances recorded. If markers are not referenced at the time of installation and records maintained by the Contractor, he shall uncover markers and provide references.

E. Wyes and fittings shall be installed in lines in accordance with pipe manufacturer recommendations.

F. Saddle connection will be considered. Written approval from the Engineer is required.

3.10 PIPE EMBEDMENT AND TRENCH BACKFILL

A. All pipe embedment and trench backfill material shall be as specified in Section 01020.

3.11 PIPE CONNECTION TO MANHOLE

A. General:
1. Connection at manhole walls shall be made by "O" ring type couplings set in the wall and having a manhole water stop assembly between the coupling and the manhole wall. The exact type of "O" ring seal shall be as recommended by the pipe manufacturer.
2. Grouting pipe in place will require Engineer approval.

END OF SECTION

PART 1 - GENERAL

1.01 SECTION INCLUDES

A. Precast concrete manholes and related items.

B. Air release valve structures.

1.02 RELATED SECTIONS

A. Section 03010: Sewer Pipe

1.03 WORKMANSHIP

A. Supervision:
Provide full time supervisor trained and familiar with the work to be undertaken.

B. Workmen:
Provide workmen qualified with every phase of work to be undertaken including concrete reinforcement, placement, and finish.

1.04 PRODUCT HANDLING

A. Protection:
Use all means necessary to protect material prior to, during, and after installation.

B. Replacement:
Replace all material damaged during course of the project.

PART 2 - PRODUCTS

2.01 MANHOLE MATERIALS OF CONSTRUCTION

A. General:
At the option of the Contractor, standard manholes may be constructed with cast-in-place concrete bases or precast concrete (developed) bases.

B. Materials:
1. Cast-in-place concrete:
Materials, handling, forms, finishing, curing, and other work as specified in the concrete section.

2. Precast concrete:
   Circular, uniform outside diameter; ASTM C478, with a minimum wall thickness of 5 inches.
3. Precast concrete adjusting rings:
   Circular, ASTM C478, with Shear Keys.
4. Nonshrink grout:
   Gifford-Hill "Supreme", L & M "Crystex", Master Builder Masterflow 713 Grout, or U.S. Grout "Five Star".
5. Resilient manhole pipe connectors:
   A-LOK manhole pipe connector.

C. Manhole frames and covers:
Standard manhole frames and covers shall have a minimum weight of 300 pounds and shall be Clay & Bailey No. 2011-MR or Neenah R-1775 or equal. All frames shall have brick rings. All covers shall be solid with no vents. Iron shall be in accordance with ASTM A48-76, Class 35.

D. Manhole steps:
Step shall be ASTM C478 Plastic Steps, Clay & Bailey No. CB-5102 M.A. Industries Polypropylene Plastic Steps No. PS-2-PF, or equal.

2.02 WATERPROOFING

A. Waterproofing shall be Koppers "Super-Service Black" or Tnemec "450 Heavy Tnemecol", or Valspar 35-J-10 Hi-Build Bituminous Coating.

B. Total dry mil thickness shall be 14 mils.

2.03 AIR RELEASE VALVE STRUCTURE

A. Structure shall be standard precast concrete sewer pipe meeting ASTM C-76.

B. Cover shall be cast iron manhole ring and cover Deeter Foundry or equal No. 1170.

PART 3 - EXECUTION

3.01 GENERAL

A. Standard manholes and special manholes shall be constructed complete with covers, in accordance with the details shown on the Drawings. Standard manholes above the foundations, unless otherwise required by the Plans, shall be constructed of precast concrete sections specially cast for use in manholes. Special manholes shall be constructed of monolithic concrete. Concrete and reinforcing steel shall conform to the specifications for concrete, Section 01040. Precast concrete sections shall be in compliance with ASTM C478 specifications, with joints filled with mastic compound.

B. Manhole inverts shall be carefully constructed to maintain the proper velocities through the manhole, and in no case shall the invert sections through the manhole be greater than that of the outgoing pipe. The shape of the invert shall conform exactly to the lower half of the pipe it connects. Side branches shall be connected with as large radius of curve as practicable. All inverts shall be troweled to a smooth clean surface.

C. The main sewer shall be carried through manholes by split pipe wherever practicable. Concrete filling between the sewer invert and walls of manholes shall be flush with the top edges of the invert and shall slope up from the invert at the rate of 2 inches per foot. The sewer should be laid continuously through manhole locations wherever grade and alignment permit, and the manhole built later. In such cases, the foundation shall be laid and carried up approximately to the center of the pipe with the specified surface slope. After the manhole is built, the upper half of the pipe shall be cut out and the bottom finished.

Where it is not practicable to use split pipe through manholes, due to breaks in grade or elevation of incoming sewers, the sewer invert shall be made of concrete deposited between forms.

D. Drop manholes and other special structures shall be built in accordance with the Drawings. All fittings, connections, drops, concrete drop encasement, and all other sewer pipe appurtenances built into wall shall be provided for drop manholes and other special structures.

E. In streets, highway shoulders, and in yard areas, manhole tops shall match adjoining surface elevations with final adjustment as required with precast concrete adjusting rings at top of manhole. Contractor shall allow for adjusting rings when determining manhole heights to permit adjustment downward if needed. At other locations, manhole tops shall be constructed to elevations set by the Engineer.

3.02 JOINTING CIRCULAR PRECAST RISER SECTIONS

A. The bell section shall be "buttered" with mastic compound and the next section set in place. Excess mastic inside the manhole shall be struck-off and any void places filled. On the exterior all void places shall be filled.

B. Mastic compound shall be a sewer joint compound meeting the approval of the Engineer. Preformed flexible plastic gaskets with removable paper will be acceptable.

3.03 FLEXIBLE WATERTIGHT PIPE ENTRANCE

A. The all rubber gasket shall be permanently cast in place in the manhole opening for the entry pipe.

B. The design of the joint will be such that when fully assembled the entering pipe can be deflected a minimum of 9 degrees and withstand an internal hydrostatic pressure equivalent to 30 feet head pressure or 13 psi for 10 minutes without leakage. Moisture or beads of water appearing on the surface of the joint will not be considered leakage.

C. Installation shall be accomplished in accordance with the gasket manufacturer's instructions. Joints shall be in accordance with the above specification.

3.04 MANHOLE BASE

A. Precast manholes shall be furnished with developed bases or base may be constructed in the field at the Contractor's option.

B. If cast-in-place concrete bases are used, concrete shall be placed on undisturbed earth.

C. If precast concrete (developed) bases are used, the subgrade materials shall be excavated to undisturbed earth and to a uniform elevation which will permit at least 4 inches of granular embedment material, as specified in the earthwork section. The surface of the granular material shall be compacted and carefully graded to provide proper grade and alignment of the base section. The base section shall be accurately set so that connecting pipes will be on proper line and grade. No wedging or blocking under precast concrete bases will be permitted.

3.05 MANHOLE STEPS

A. Steel reinforced plastic steps shall be plant-installed, driven into prepared holes or vibrated into green concrete in accordance with the recommendations of the step manufacturer.

3.06 CONNECTING PIPING

A. The space between connecting pipes and the wall of precast sections shall be completely filled with nonshrinking grout, except where resilient connectors are provided.

B. When resilient connectors are used, the connecting pipe shall be carefully adjusted to proper line and grade. The pipe shall be installed in the resilient connector prior to backfilling outside the manhole and shall be resealed after completion of the manhole and backfill. All visible leakage shall be eliminated.

C. The connecting pipe for installation with resilient connectors shall be plain end, square cut spigots and shall not protrude more than 1 inch inside the manhole wall. A clear distance of at least 1 inch from the end of each connecting pipe and around the pipe shall be provided when the concrete invert fill is installed. After completion of the manhole, the boxout shall be filled with mastic filler material, completely filling the space beneath the pipe and extending to at least the springline. The filler material shall provide a smooth, uniform surface between the inside diameter of the pipe and the manhole invert.

3.07 STUBS

A. Stubs for future connections shall be provided in manholes at the locations indicated. Stubs shall be not less than 3'-0" or more than 4'-0" long, unless otherwise noted, and shall terminate in a bell and plug.

3.08 WATERPROOFING MANHOLES

A. Surface shall be prepared as required by manufacturer.

B. The exterior of all manholes shall be coated with a heavy coat of coal-tar paint as required by manufacturer's instructions.

C. Reinforced concrete pipe manholes or circular precast concrete section manholes shall be waterproofed.

D. Coating damaged during construction shall be recoated and allowed to cure prior to backfilling.

END OF SECTION

D. SEPTIC TANK SYSTEMS

The City of Baldwin City has adopted a modified version of Chapter 2 of the Douglas County, Kansas Sanitary Code, as a municipal standard for septic tank-lateral fields. Chapter 2 of the county Sanitary Code, as modified, is reproduced in Section D.

SANITARY CODE

DOUGLAS COUNTY, KANSAS

TABLE OF CONTENTS

Page No.

Chapter 2 - SEPTIC TANK-LATERAL FIELDS AND OTHER SEWAGE DISPOSAL SYSTEMS D-1

Section 1 - Definitions D-1

Section 2 - Disposal of Sewage D-3

Section 3 - Toilets D-4

Section 4 - Connection to Sewer D-4

Section 5 - Sewage Conduits for Onsite Sewage Management Systems D-4

Section 6 - Onsite Sewage Management Systems D-5

Permits Required D-5

Area Requirements D-5

Data Requirements D-6

Field Data Requirements D-7

Septic Tanks D-8

Distribution Boxes D-10

Absorption Fields D-10

Alternative & Experimental Onsite Sewage Management Systems D-14

Grease Traps D-15

Sewage Lift Pumps D-15

Section 7 - Activated Sludge Plants (Package Plants) D-15

Section 8 - Other D-15

Section 9 - Penalty D-16

Table A - Location of Sewage Disposal System D-17

Figure A - Sequential, Step-Down on Overhead System D-18

Figure B - System for Level Ground D-19

Figure C - Distribution Box System on Sloping Ground D-20

CHAPTER 2

SEPTIC TANK-LATERAL FIELDS AND OTHER SEWAGE DISPOSAL SYSTEMS

Section 1 DEFINITIONS

In addition to the definitions provided in Chapter 1 of this code, the words, terms and phrases listed below, for purposes of this Chapter 2, are defined as follows:

2-1.1 Absorption Field. The term "absorption field" means a configuration of onsite trenches installed to absorb sewage effluent from a septic tank or other sewage solids removal device.

2-1.2 Absorption Pit. The term "absorption pit" means a pit or hole in which gravel is placed.

2-1.3 Absorption Trench. The term "absorption trench" means a trench in which perforated drain pipe is laid to convey and distribute septic tank effluent.

2-1.4 Alternative Onsite Sewage Management System. The term "alternative onsite sewage management system" means any onsite sewage management system which has proven reliability and performance in field use, but which differs in design or operation from approved conventional septic tank and absorption-field systems.

2-1.5 Approval or Approved. The term "approval" or "approved" means accepted or acceptable by the Health Department in accordance with applicable specifications stated herein or with additional criteria accepted by the Department.

2-1.6 Available Sewer. The term "available sewer" means any public sewer within 200 feet of a building.

2-1.7 Buildable Space. The term "buildable space" means the entire area of the lot, tract or parcel on which an individual septic tank or other onsite sewage management system is to be located, exclusive of all established road rights-of-way.

2-1.8 Building Sewer. The term "building sewer" means that part of the piping of a drainage system beyond the building which receives and conveys liquid wastes to a public sewer, private sewer, onsite sewage management system or other disposal.

2-1.9 Distribution Box. The term "distribution box" means a watertight structure which receives sewage from a septic tank or other sewage retention device and equally distributes it to two or more absorption trenches.

2-1.10 Experimental or Innovative Onsite Sewage Management System. The term "experimental or innovative onsite sewage management system" means any onsite sewage management system installed for testing and observation.

2-1.11 Grade. The term "grade" means the ratio of vertical drop of pipe invert, trench bottom, or ground surface to the horizontal distance transversed.

2-1.12 Grease Trap. The term "grease trap" means a device in which the grease content of sewage is intercepted and congealed and from which the grease may be removed for proper disposal.

2-1.13 Lagoon or Sewage Lagoon. The term "lagoon" means an artificial pond designed to exclude surface water and receive raw sewage through a submerged sewer for biological decomposition.

2-1.14 Lot. The term "lot" means the smallest basic portion of a subdivision or other tract of land, normally intended to be developed and transferred individually.

2-1.15 Lateral Rock. The term "lateral rock" means washed gravel or washed crushed stone ranging in size from three-quarter inch (3/4") to one and one-half inches (1 1/2").

2-1.16 Onsite Sewage Management System. The term "onsite sewage management system" means a system that includes a septic tank, absorption field and all other elements intended to be used for management and disposal of sewage onsite. A septic tank-lateral system is an onsite sewage management system.

2-1.17 Package Plant. The term "package plant" means an approved watertight structure installed underground to receive, agitate and aerate sewage from a building sewer, effecting separation and organic decomposition of sewage solids and discharging effluent to an absorption field.

2-1.18 Private Water Supply. The term "private water supply" means a water system serving a single family residence and not ordinarily available to the public.

2-1.19 Public Water Supply. The term "public water supply" means any water system other than a private water supply.

2-1.20 Public or Community Sewerage System. The term "public or community sewerage system" means any sewage collection, treatment and disposal system, including sewers, treatment plants, pumping stations, force mains and all other elements owned, operated or managed by a public entity (including agents thereof) and serving more than one residential premises.

2-1.21 Regulatory Flood. The term "regulatory flood" means the flood having a one percent chance of being equalled or exceeded in any given years.

2-1.22 Regulatory Floodway. The term "regulatory floodway" means an area designated by the Federal Insurance Administration which shall include the channel of a river or other watercourse and the adjacent land areas that must be reserved in order to discharge the regulatory flood without cumulatively increasing the water surface elevation of more than one foot on the adjacent land.

2-1.23 Septic Tank. The term "septic tank" means an approved watertight structure installed underground to receive sewage from a building sewer, effecting separation and organic decomposition of sewage solids and discharging effluent to an absorption field.

2-1.24 Sewage. The term "sewage" means any liquid waste containing animal or vegetable matter in suspension or solution, including all household wastes from toilets, sinks, showers, washing facilities and floor drains, and may include liquids from laboratories, businesses or industrial operations containing minerals in solution.

2-1.25 Toilet. The term "toilet" means a sanitary fixture meeting Health Department and plumbing code requirements for receipt and conveyance of human body wastes.

Section 2 DISPOSAL OF SEWAGE

2-2.1 No person shall urinate or defecate in a public place other than in a toilet or other disposal receptacle approved by the Health Department. Flush toilets must be connected to a public sewer or an approved onsite sewage management system. Privies must meet requirements of the Health Department as to design and installation in lieu of a flush toilet and must be specifically approved by the Department.

2-2.2 All sinks, lavatories, garbage disposals, dishwashers, clothes washing machines, shower baths, bathtubs, basins and similar plumbing fixtures or appliances shall be connected to a public sewer or to an approved onsite sewage management system.

2-2.3 Foundation drain water or other non-sewage or surface water must not go into the septic tank or onsite sewage management system.

2-2.4 No household, industrial or commercial wastes shall be discharged into any watercourse, impoundment, storm sewer or public thoroughfare. The discharge of sewage into seepage pits, abandoned wells, cisterns, streams or upon the surface of the ground shall be prohibited. In no case shall treated or untreated sewage, or the effluent from a septic tank or onsite sewage management system be permitted to drain directly or indirectly into a ditch or stream, nor shall it be allowed to surface or run or drain across any adjacent land owner.

2-2.5 In the event that a failure of an onsite sewage management system occurs and it is determined by the Health Department that the system cannot be repaired, then either connection to a public sanitary sewer shall be made or a new approved onsite sewage management system shall be installed.

2-2.6 Where no sewer is available or where onsite sewage management is not possible, innovative/alternative systems may be considered for approval by the Health Department.

2-2.7 Onsite sewage management systems shall be maintained in sanitary condition by regular maintenance and/or repair.

Section 3 TOILETS

2-3.1 Every premises shall be provided with at least one flush toilet in accordance with the provisions of this regulation. Privies shall not be permitted if public sanitary sewer is available or an onsite sewage management system can be approved.

2-3.2 Every flush toilet shall be connected to a public sewer or to an approved onsite sewage management system.

2-3.3 Flush toilets shall at all times be provided with sufficient water and pressure to provide adequate flushing.

Section 4 CONNECTION TO SEWER

2-4.1 The owner, lessee or agent thereof of any building, residence or other facility designed or used for human occupancy or congregation, shall provide on the premises a system to dispose of the sewage generated within the building, residence or other facility.

2-4.2 If a public or community sewage system is available and a new building is being constructed then the building sewer shall be connected to the available sewage system.

2-4.3 A public or community sewerage system shall be considered available if it is within two hundred (200) feet of the property line.

2-4.4 When a public or community sewerage system has become available to a premises served by an onsite sewage management system and failure of the onsite sewage management system occurs, the owner, lessee or agent shall be required to connect properties affected to the public or community sewerage system within 90 days.

Section 5 SEWAGE CONDUITS FOR ONSITE SEWAGE MANAGEMENT SYSTEMS

2-5.1 Size of sewage conduits. Sewage conduits connecting component parts of onsite sewage management systems shall be a minimum of 4 inches in diameter.

2-5.2 Materials. All pipe and fittings used in sewage conduits and/or in absorption fields shall meet nationally-recognized standards for their designated use - such as Standards published by the American Society for Testing and Materials or the National Sanitation Foundation and shall have been approved by the Health Department for use in onsite sewage management systems. Sewage conduits under driveways or similar areas of load or impact shall be of material capable of withstanding maximum anticipated loads. All sewage and lateral pipe shall be marked to indicate it meets or exceeds a 1,000 pound "crush test" rating.

2-5.3 Construction. Sewage conduits (other than perforated pipe used in absorption fields) shall be installed with sealed, watertight, root-resistant joints and shall be laid on a firm foundation. This shall not be subject to settling, and shall be installed at a grade not less than one eighth (1/8) inch per foot. All pipe from the structure to the lateral field shall be laid "bells up" if bell and

spigot pipe is used.

2-5.4 Cleanouts. Cleanouts shall be placed at the junction of the building drain and building sewer at intervals not to exceed 100 feet in straight runs and as required by the Health Department.

2-5.5 The building sewer shall be a minimum horizontal distance of 10 feet from a private water line.

Section 6 ONSITE SEWAGE MANAGEMENT SYSTEMS

2-6.1 Permits Required

a. No person shall be issued a building permit without having first obtained from the Health Department a permit to construct the onsite sewage management system. A fee shall be charged by the Health Department for the onsite sewage management system permit.

b. No person shall construct, repair or alter an onsite sewage management system without obtaining a construction permit for such purpose from the Health Department. No permit for the construction, repair or alteration of an onsite sewage management system shall be issued until the Health Department has inspected and approved the site and the proposed location and design of the onsite sewage management system. A fee shall be charged by the Health Department for the service. No onsite sewage management system constructed, altered or repaired may be covered totally or in part until it has been inspected and approved by the Health Department. The system may be inspected by the Health Department at any stage of construction.

c. All applicants will be required to sign an application form to acknowledge the sewer system must be inspected and installed according to the approved plan.

d. No house or structure shall be occupied or used until a final inspection shows the onsite sewage management system has been approved by the Health Department.

e. An owner or agent for the owner may request an onsite review by the Health Department of a lot without obtaining a permit to construct the system. A fee shall be charged for this consultation service.

2-6.2 Area Requirements

a. Individual on-lot septic tank lateral systems may not be constructed where the area of the lot is less than three acres.

b. **Omitted**

c. **Omitted**

2-6.3 Data Requirements

a. Residential. The following shall be submitted to and accepted by the Health Department before issuance of a permit to construct an onsite sewage management system:

1) A drawing (an 8 1/2" by 11" pencil is recommended), showing the following:

(a) Name, address, and phone number of applicant and owner.

(b) Location of building site, including legal description with section, township, and range.

(c) Size of house in square feet of finished area, number of bedrooms, number of persons to live in the home and a list of all water-using appliances.

(d) A drawing of the lot or site, showing:

(1) overall dimensions of the lot;

(2) location of buildings, driveways, and geographical features near the proposed lateral field;

(3) location and type of water supply, and location of water service lines;

(4) layout of entire onsite sewage management system; septic tank, distribution box, if used, laterals and interconnecting lines; and

(5) a cross-section of lateral trench, with dimensions.

(e) Foundation, footing, or any other non-swage drain location.

(f) Arrow indicating North direction.

2) Other supportive data or information required by the Health Department.

b. Commercial. the following data shall be submitted to and accepted by the Health Department prior to issuance of a permit to construct an onsite sewage management system:

1) Name, address, and phone number of applicant and owner;

2) Type of establishment;

3) Location of building site, including legal description with section, township, and range; lot or parcel identification;

4) Anticipated water usage and peak daily sewage flow;

5) All water-using equipment or appliances;

6) Copies of a site plan of the entire property under development showing the following:

(a) Overall dimension of the lot, area in square feet;

(b) Location of buildings, structures, driveways, parking, access roads, loading areas, receptacle locations, buffers, public and private easements, and any geographical features near the proposed onsite sewage management system;

(c) Location and type of water supply, and location of water service lines;

(d) Proposed type, size and location of onsite sewage management system;

(e) Existing and proposed topography;

(f) Proposed drainage.

7) Other supportive data or information required by the Health Department.

8) A letter from the owner or agent for the owner estimating the maximum number of customers, employees, etc., size of building and the specific use of the facilities including whether the sanitary facilities are for public use.

2-6.4 Field Data Requirements

a. Water Table Borings. Borings to determine groundwater elevation in low areas may be required by the Health Department. Borings shall be made to a minimum depth of seven (7) feet. Water table elevations shall not be recorded until sufficient time has elapsed for stabilization of groundwater (such stabilization in clay soils may require several hours or overnight). Location, identification number and depth to water table shall be recorded on the plat or site plan which may indicate topography, if required. Other records of water

table elevation, including seasonal peaks, may be submitted or required.

b. Rock Borings. Where surface outcroppings or subsurface rock or hard-pan exist or are suspected, a sufficient number of borings to a minimum depth of four (4) feet may be required by the Health Department to determine if such conditions may interfere with installation, performance or repair of the proposed onsite sewage management system. Boring locations and data shall be recorded by number on the plat or site plan which may indicate topography, if required.

c. Evidence of the presence of water in the borings shall negate the use of conventional onsite sewage management systems in that area. Innovative or alternative systems may be reviewed on an individual basis. Evidence of rock in the borings may negate the use of a system in that area.

d. Soil analysis and other field tests may be required. The number, depth, and location shall be determined by the Health Department.

e. The location of the house must be staked, property corners must be staked or flagged, and the lateral field area must be staked or flagged.

2-6.5 Septic Tanks

a. Minimum Design and Construction. Septic tanks shall be watertight, constructed or solid concrete, and must be monolithic with the sides and bottom all one piece.

Precast tanks shall have a minimum wall thickness of 2 1/2 inches, and must be adequately reinforced to facilitate handling. When precast slabs are used as covers, they should have a thickness of at least three (3) inches and be adequately reinforced.

The distance from the top of the tank and the liquid line shall be at least twenty (20) percent of the liquid depth.

b. Compartments. A single compartment septic tank is acceptable. A two compartment septic tank shall meet the following criteria:

1) The inlet compartment shall have not less than one-half to two-thirds of the total capacity of the tank nor less than 750 gallons liquid capacity. The second compartment shall have a capacity of not less than 250 gallons or more than one-half of the total capacity.

2) Partitions or baffles between compartments shall be of durable material and shall extend not less than 4 inches above the liquid level. An inverted fitting equivalent in size to the tank inlet, but in no case less than 4 inches in size, shall be installed in the inlet compartment side of the baffles with the bottom of the fitting placed midway in the depth of the liquid.

3) Venting between compartments must be provided to allow free passage of gas.

4) Baffles shall be made of fiber glass, acid-resistant concrete, or other material approved by the Health Department.

c. Approval Procedures. Any person seeking approval of septic tanks to be used in onsite sewage management systems other than those of standard size and configuration made with reinforced concrete, shall submit detailed plans and specifications, test and performance data and quality control procedures as may be required by the Health Department for complete understanding and evaluation of the product. No other septic tanks shall be installed unless specific written approval is granted by the Health Department.

d. Location. The septic tank shall be located as set forth in Table A. No septic tank shall be installed within:

1) Ten (10) feet of a house or structure if set below the lowest floor;

2) Twenty-five (25) feet or more if set above the lowest floor;

3) Ten (10) feet of a property line, absorption trench, domestic water supply line, driveway, or foundation drain;

4) Fifty (50) feet of any water supply;

5) Twenty-five (25) feet of any stream, pond, basement, cellar, cistern, or water main.

6) Regulatory floodway.

The Health Department, after site inspection, may stipulate greater separation than cited herein, due to adverse onsite conditions including location of a well onsite or nearby; site configuration or structural placement; sub-surface soil characteristics and/or groundwater interference.

e. Capacity. The liquid capacity of septic tanks shall be as follows:

1) Single family residence - 1000 gallons or more.

2) Commercial - 500 gallons or more.

3) Others - 500 gallons or more.

f. Foundation and Backfill. Septic tanks shall be constructed or installed level on a foundation that will prevent settling.

Backfill shall be free of voids, stumps, broken masonry or other such materials. The lid of the tank shall be covered with earth.

g. Access and Inspection. Access to each compartment shall be provided by at least one manhole. Inspection holes or manholes should be located over the inlet and outlet pipes.

h. Inlet Pipe. The inlet invert should be located at least three (3) inches above the liquid level in the tank. A vented inlet tee or baffle must be used to divert the incoming sewage downward. It should extend at least twelve (12) inches below the liquid level, but the penetration must not be greater than that provided by the outlet device.

i. Outlet Pipe. the outlet device must extend below the liquid surface a distance equal to forty (40) percent of the liquid depth. A vented outlet tee should be provided when an overhead distribution line is used.

j. Sealed. A watertight seal shall be made around the inlet and outlet pipes with a bonding compound that will adhere both to the concrete septic tank and the exterior surfaces of the inlet and outlet pipes. The lid shall be sealed to the walls of the tank. Any holes in the tank must be sealed so that the tank is watertight.

k. The top of the septic tank or an access manhole shall be within a minimum of 6 inches and maximum of 12 inches of the finished grade.

2-6.6 Distribution Boxes.

a. Minimum Design and Construction. Distribution boxes shall be watertight, constructed of solid concrete, and must be monolithic with the sides and bottom all one piece. Distribution boxes shall be designed and constructed in accordance with minimum design and construction criteria and with the approval procedures set forth under Septic Tanks, 2-6.5 c.

b. Foundation and Installation. See Absorption Fields, 2-6.7 d. 3).

2-6.7 Absorption Fields.

a. Area Computation. The following criteria shall be used to determine the amount of lateral required:

1) Single Family Residence - 100 lineal feet of lateral per person plus ten (10) percent for dishwasher (50 feet minimum) and five (5) percent for garbage disposal (25 feet minimum); or

150 lineal feet per bedroom; or

100 lineal feet for each 300 square feet of finished area within the house.

The above method, which requires a greater number of lineal feet of lateral, will be used. A minimum of 400 lineal feet will be required. A minimum of 600 lineal

feet of lateral will be required on housed of unknown sewage loads.

2) Commercial - Commercial septic tanks - Lateral field sewage disposal systems shall be designed on loading and anticipated water usage and sewage produced. A minimum of 100 lineal feet of lateral shall be required for each 1,000 gallons of water used per month. A minimum of 200 lineal feet of lateral will be required.

3) Others - The lateral field size shall be determined by the anticipated loading, water use, and sewage produced. A minimum of 100 lineal feet of lateral will be required.

These standards are based on "average" soil conditions found in most areas of Douglas County. The total number of lineal feet of required lateral may be adjusted if soil conditions found are different than the average.

b. Absorption Field Location Restrictions. The absorption field shall be located as set forth in Table A. No part of an absorption field shall be located within:

1) Ten (10) feet of the house, septic tanks, distribution box, buildings, property lines, driveways, water lines, buried utility lines, foundation drains, and dropoffs;

2) Twenty-five (25) feet of basements, cellars, water mains;

3) Fifty (50) feet of cisterns, ponds, creek banks and streams;

4) One hundred (100) feet of water wells.

5) Absorption fields shall not be installed in the regulatory floodway nor where groundwater or adverse geological formations may interfere with the absorption of treated sewage or result in the contamination of groundwater by sewage.

6) Absorption fields shall not be installed in areas subject to excessive surface water, ponding or runoff, including but not limited to storm water and discharge from building gutters.

The Health Department, after site inspection, may require variations of these distances due to adverse conditions relative to topography, subsurface soil characteristics, and/or groundwater sources. No part of the absorption field shall be covered by buildings or pavement or be used for vehicular traffic or parking.

c. Minimum Design and Construction.

1) An absorption trench shall not exceed one hundred (100) feet in length from where it is fed unless specific approval is given by the Health Department. Absorption trenches shall be between twenty-five (25) inches and thirty-two (32) inches in depth. The trench shall be a minimum of twenty-four (24) inches wide.

2) Installations of laterals must be along contour lines so that level trenches of uniform depth can be constructed. The bottom of the lateral trench is to be level.

3) A fifteen (15) inch depth of 3/4 to 1 1/2 inches washed lateral rock (i.e. aggregate) shall be provided in the bottom of the trench. Perforated pipe shall be laid in the center of the lateral rock; perforations shall be oriented toward the bottom of the trench. Lateral rock shall be placed under the perforated pipe to a minimum depth of six (6) inches and shall extend the full width of the trench and five (5) inches of lateral rock shall cover the perforated pipe. All pipe shall be four (4) inches in diameter and a minimum of one thousand (1,000) pound "crush".

4) Ten (10) inch minimum to eighteen (18) inch maximum earth cover shall be placed over the lateral rock. The earth cover over the lateral rock must be of uniform depth.

5) A continuous layer of permeable material shall be placed over the lateral rock before backfilling with the earth cover. The permeable material shall be:

   (a) Four to six inches of hay or straw;

   (b) Untreated building paper; or

   (c) Another material approved by the Health Department.

   If untreated building paper is used, then all seams must overlap two (2) inches and any tears must be covered.

6) Excavation for absorption trenches in wet clay soils and smearing of trench walls and bottoms shall be avoided since reduced permeability may result and approvals may be voided thereby.

7) The ground surface of the lateral field area shall be so graded as to prevent the accumulation of surface water and to minimize the flow of surface water over the lateral field. Test holes, diverter ditches or flow control devices will be required under some circumstances. It may be necessary to prepare the ground for the lateral field, such as removal of rocks, trees, replacement of soil.

8) There shall be a minimum of four feet between the bottom of the absorption trench and an unseasonably high water table.

d. Field Layout Methods.

1) Sequential Step-down or "Overhead" System. This method is well suited to terrain with a slope.

In this system, effluent is not distributed equally to all the lateral lines. Instead, the lines are filled sequentially, and diversion to the next line does not occur until the fluid level in the preceding trench reaches slightly above the top of the rock fill.

The installation of laterals must be along contour lines so that level trenches of uniform depth can be constructed. The bottom of the lateral trench is to be level. The overhead distribution line must be connected at the center of each lateral line, and at any elevation so that the bottom of the overhead line is two (2) inches above the lateral rock in the absorption trench. The overhead distribution line must be set on a firm foundation of undisturbed earth. The sequential system is illustrated in Figure A.

2) Level Field Method. On flat terrain the level field method may be used. When this method is used, all distribution trenches shall be installed level and at the same elevation, shall not exceed one hundred (100) feet in length and shall be connected at the ends to form a continuous system. A standard tee fitting shall be used to distribute treated sewage. A standard tee fitting shall be used to effect a juncture of the ends of any three distribution lines. The level field method is illustrated in Figure B.

3) Distribution Box Method. On level or moderately sloping topography, the distribution box method may be used. A level concrete foundation shall be provided to ensure against tilting and it shall extend six (6) inches beyond the box in both dimensions. Extreme care must be exercised in back-filling around and over the distribution box. Influent lines from the septic tank shall terminate inside the distribution box via an elbow turned downward to form a submerged inlet at normal water level. When this method is used, absorption trenches of equal lengths, not exceeding one hundred (100) feet, shall be connected to distribution box outlets by independent sewers. While such absorption trenches may be installed at the same or different elevations, all lines leading from the distribution box to absorption trenches must be installed level and at the same elevation for the initial two (2) feet, shall be watertight,and, for the remainder of their sealed length, the grade of such lines shall not be less than one-eighth (1/8) inch per foot. All perforated distribution lines shall be laid on a level grade. The

absorption trench shall meet all the minimum design and construction criteria as set forth under Absorption Fields, 2-6.7 c. The distribution box method is illustrated in Figure C.

2-6.8 Alternative and Experimental Onsite Sewage Management Systems.

a. Consideration of Alternative Systems. Where appropriate, and after thorough assessment of alternatives, the Health Department will consider alternative onsite sewage management systems and/or site modifications for conventional or alternative systems in areas of marginal suitability.

b. Priorities. Priority consideration will be given those proposals for alternative sewage disposal systems whose implementation may resolve existing sewage management problems.

c. Review and Approval of Alternative Onsite Sewage Management Systems. Those desiring to install an alternative onsite sewage management system shall submit the following information to the Health Department.

1) Plans and specifications including type and location of site modifications, along with any engineering, laboratory, or field data required.

2) Provisions for a back-up system, including reservation of undisturbed space.

3) Any additional information required for complete understanding and decision formulation by the Health Department.

4) If the proposal for the system is approved, those making application will be informed by the Health Department of responsibilities for maintenance and of any monitoring procedures deemed appropriate by the Health Department.

5) Reduction of water usage by installation of water-conserving fixtures and devices may be required.

d. Experimental and Innovative Sewage Disposal Systems. The Health Department may consider proposals for the use of experimental and innovative onsite sewage management systems.

e. The Health Department may require the alternative, experimental and innovative sewage disposal systems to be designed by a professional engineer and may ask for review of the proposal by Kansas Department of Health and Environment.

2-6.9 Grease Traps.

a. Grease Traps Required. Grease traps are neither necessary nor recommended for onsite sewage management systems serving residences, but shall be required for those serving commercial or industrial establishments where it is determined by the Health Department that introduction of grease into the onsite system might adversely affect it.

b. Grease Trap Design. Grease trap plans and specifications shall be submitted to the Health Department for approval. No human waste shall pass through the grease trap. No grease trap shall have less than one hundred twenty-five (125) gallons capacity and effluent shall be directed to the septic tank. Grease traps shall be sized with a minimum capacity by multiplying three (3) gallons times the maximum occupancy (as set forth by the appropriate Fire Department) times two (2).

c. Construction. Grease traps shall be located, installed and constructed so that they will reduce the temperature of kitchen wastes to permit congealing of grease. Easy access for cleaning and grease removal shall be provided.

2-6.10 Sewage Lift Pumps.

In the event that the sewage generated from a building or residence cannot be plumbed to an absorption field or sanitary sewer by gravity, then a sewage lift pump with the necessary appurtenances as determined by the Health Department may be required. The pump chamber must be sealed, odor proof and watertight and located within the structure it serves as part of the plumbing.

Section 7 ACTIVATED SLUDGE PLANTS (PACKAGE PLANTS)

The use of preassembled activated sludge plants, usually referred to as package plants, may be considered where practical. When used individually in a residential installation, their volume shall be equal to or greater than required of a septic tank and they shall be constructed of solid concrete unless located within the structure it serves. The effluent shall be discharged to lateral field as required for septic tanks. Their flow-through ability must not be affected by a power failure. If the effluent from the package plant is not discharged to an onsite sewage management system, then a permit is required from the Kansas Department of Health and Environment before the package plant can be installed.

Section 8 OTHER

Cesspools, seepage pits, sand filters, and holding tanks shall be prohibited for new or permanent installations. However, portable holding tanks serving camping, recreation vehicles, and boats are acceptable.

Portable toilets equipped with holding or storage tanks, chemical or otherwise, shall be prohibited except on a temporary basis as determined acceptable by the Health Department.

Section 9 PENALTY

Any person violating the provisions of these Standards shall be deemed guilty of a misdemeanor and shall be punished by a fine of not less than one hundred dollars ($100) nor more than five hundred dollars ($500) or by imprisonment for a period not to exceed ninety (90) days, or both such fine and imprisonment. Each transfer, or offer of sale, of a lot or parcel of land in violation of the Standards shall be considered a separate offense.

TABLE A

LOCATION OF SEWAGE DISPOSAL SYSTEM

Minimum Horizontal Distance In Clear Required From	Septic Tank	Disposal Field
House or structures	10 feet	10 feet
Property line	10 feet	10 feet
Water supply (well)	50 feet	100 feet
Streams	25 feet	50 feet
Absorption trench	10 feet	10 feet
Water line	10 feet	10 feet
Driveway	10 feet	10 feet
Buried utility lines	---	10 feet
Foundation drains	10 feet	10 feet
Drop-offs	---	10 feet
Basement	25 feet	25 feet
Cellar	25 feet	25 feet
Pond	25 feet	50 feet
Cistern	25 feet	50 feet
Water mains	25 feet	25 feet

FIGURE A.

"SEQUENTIAL" "STEP-DOWN" "OR OVERHEAD" SYSTEM

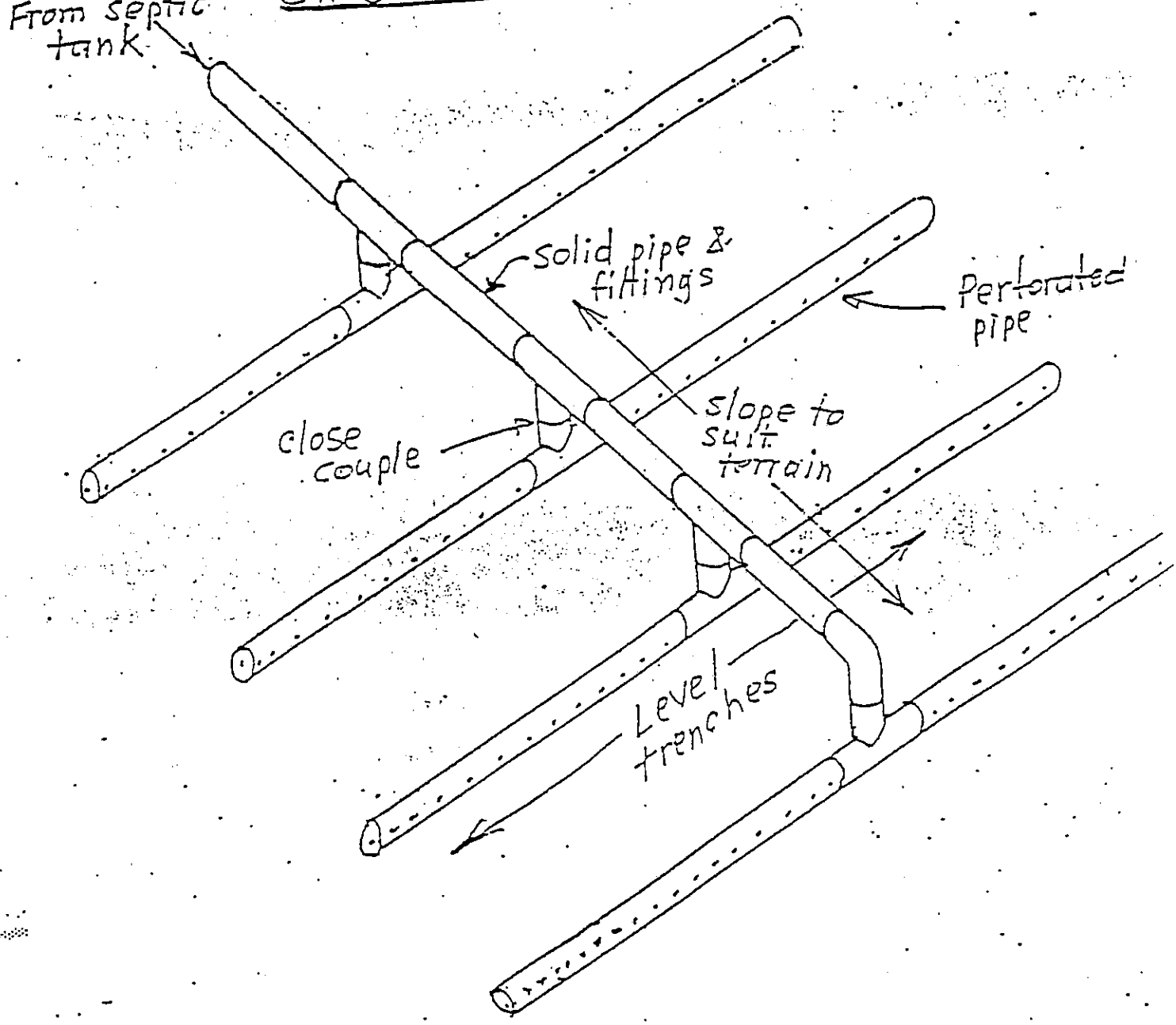

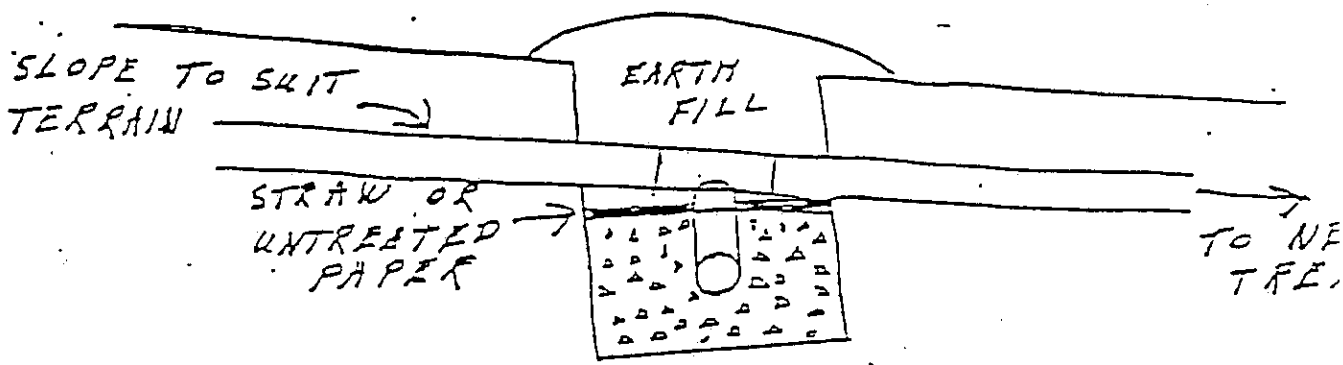

FIGURE 8. System for Level Ground

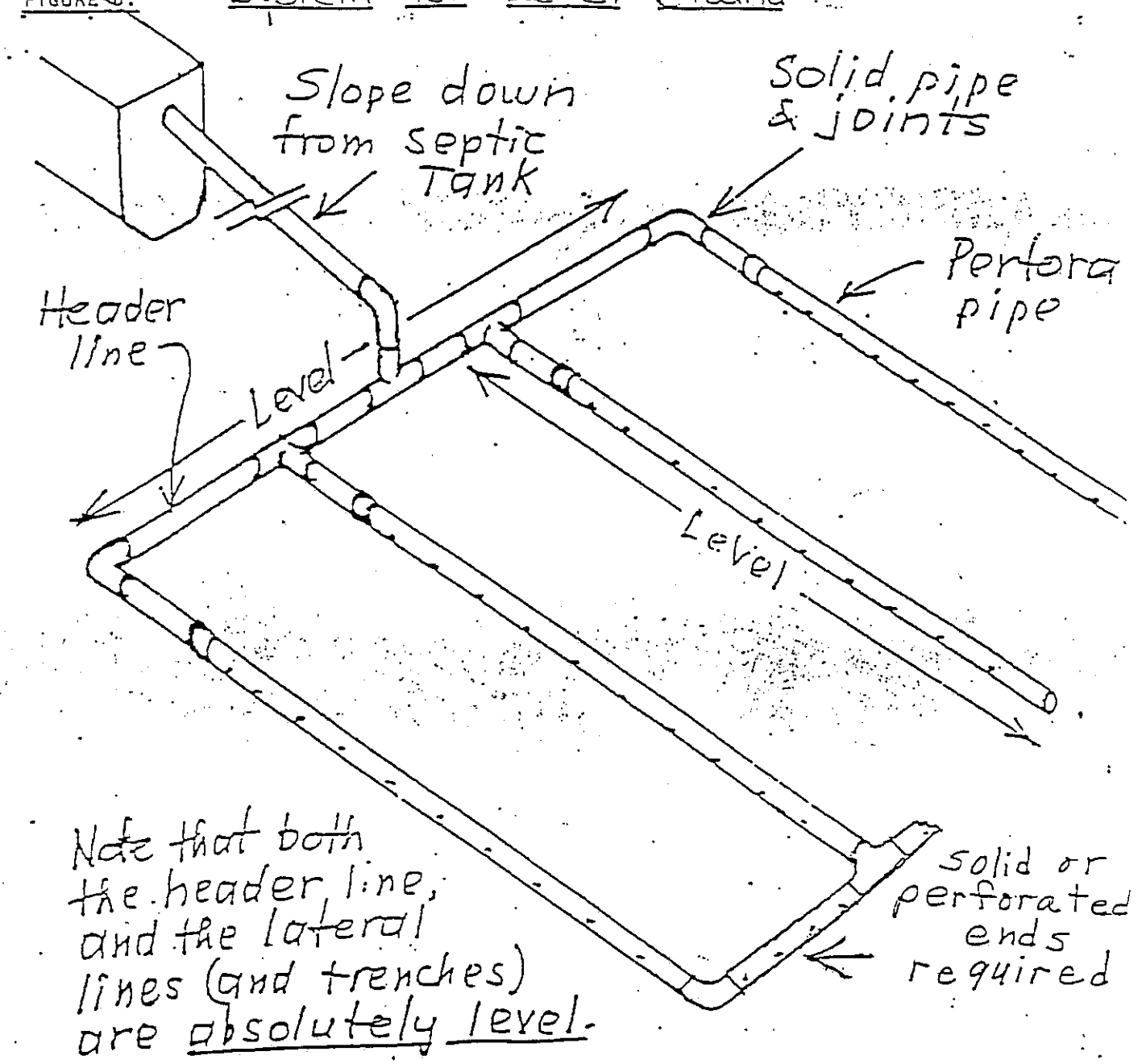

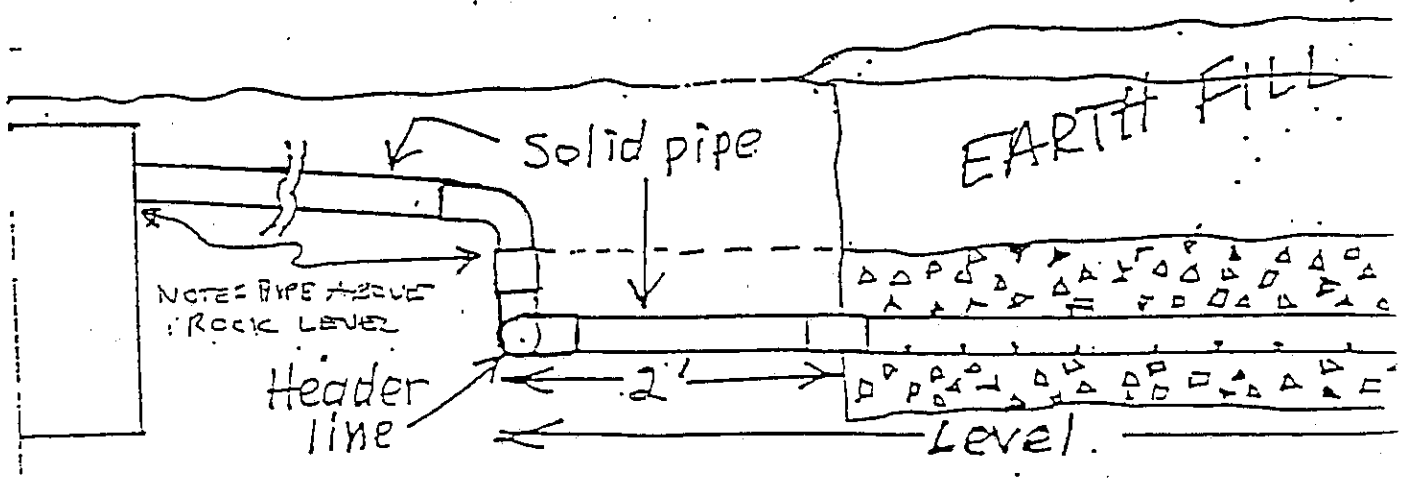

FIGURE C. DISTRIBUTION BOX SYSTEM on SLOPING GROUND

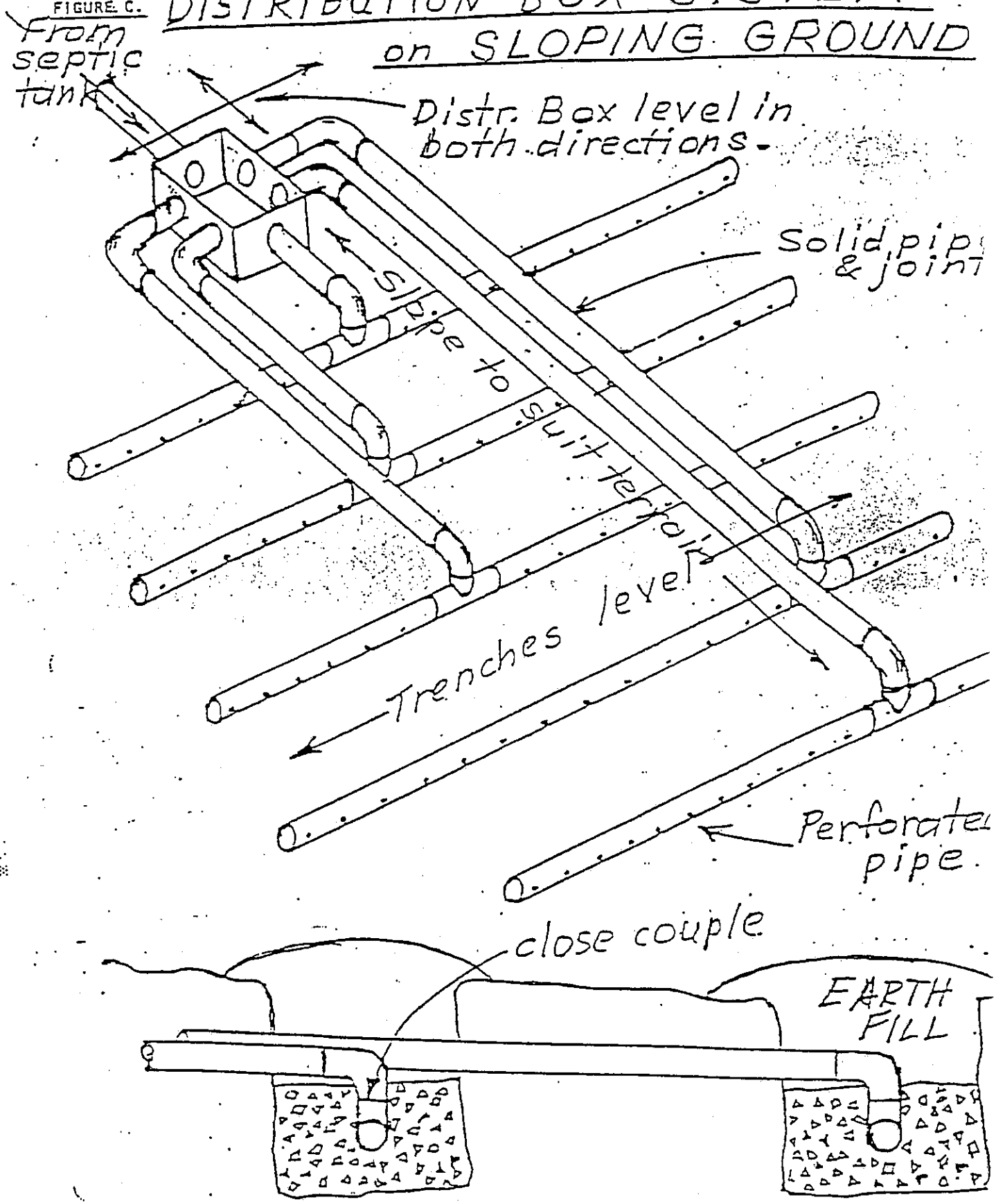

III. CONSTRUCTION STANDARDS.

WATER AND SEWER MAINS

A. CONSTRUCTION STANDARDS FOR WATER MAIN EXTENSIONS AND RELOCATIONS

Construction Standards
for
Water Main Extensions and Relocations

Construction Detail Standards

Item	Drawing No.
Embedments for Water Mains	1
Encasement Under Roadways	2
Encasement Under Railroad	3
Hydrant Installation with 90 Degree Bend	4
Hydrant Installation Set Straight	5
Service Connection Detail	6
Pre-Cast Concrete Vault	7
Straddle Block	8
Backing Blocks	9
Repair of Cuts in High-Type Pavement	10
Repair of Cuts in Low-Type Pavement	11
Polyethylene Encasement for Ductile Iron Pipe	12
Locator wire for PVC Pipe	13

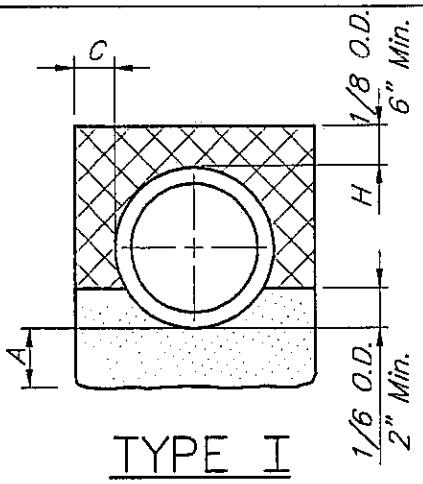

TYPE I

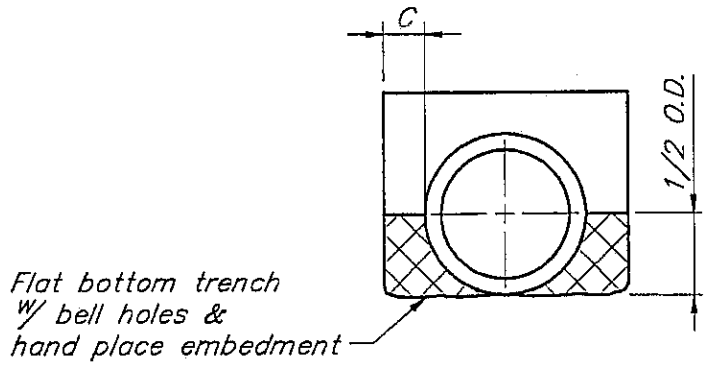

TYPE II

Table of Embedment
Depth Below Pipe

I.D.	A Min. Soil	A Min. Rock
16" & Smaller	3"	6"

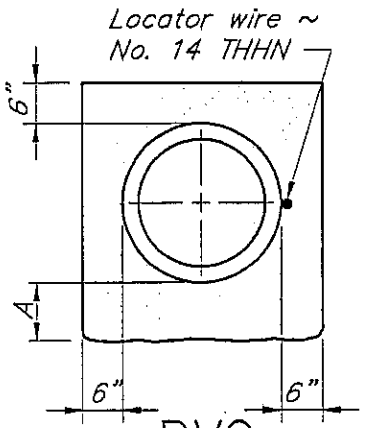

PVC

LEGEND
A – Embedment below pipe (See table)
C – 8" Clear
H – Cover above top of pipe
O.D. – Outside diameter of pipe
I.D. – Nominal pipe size

GRANULAR FILL.

TAMPED BACKFILL

COMPACTED BACKFILL

NOTES:
Granular Bedding shall be crushed rock of pea gravel not less than 95% passing 1/2" and not less than 95% retained on a #4; to be place in not more than 6" layers and compacted by slicing with a shovel or vibrating.
Compacted Backfill shall be finely divided job excavated material free from debris, organic material and stones, placed in uniform layers not more than 8" thick, compacted to 95% maximum density as determined by ASTM D698 or graded aggregate granular backfill material may be substituted for all or part of compacted backfill.
Tamped Backfill shall be finely divided job excavated material free from debris, organic material and stones, hand placed in uniform layers not more than 8" thick and tamped around conduit pipe. Granular backfill material may be substituted for all or part of tamped backfill.
Trench Backfill shall be as required in "Trenching, Backfilling and Compaction", Section 01020, of the detailed specifications.
Embedment: The type of embedment to be used shall be as specified in the plans and specifications.

EMBEDMENTS FOR PVC WATER MAINS AND CONDUITS

DRAWING NO. 1

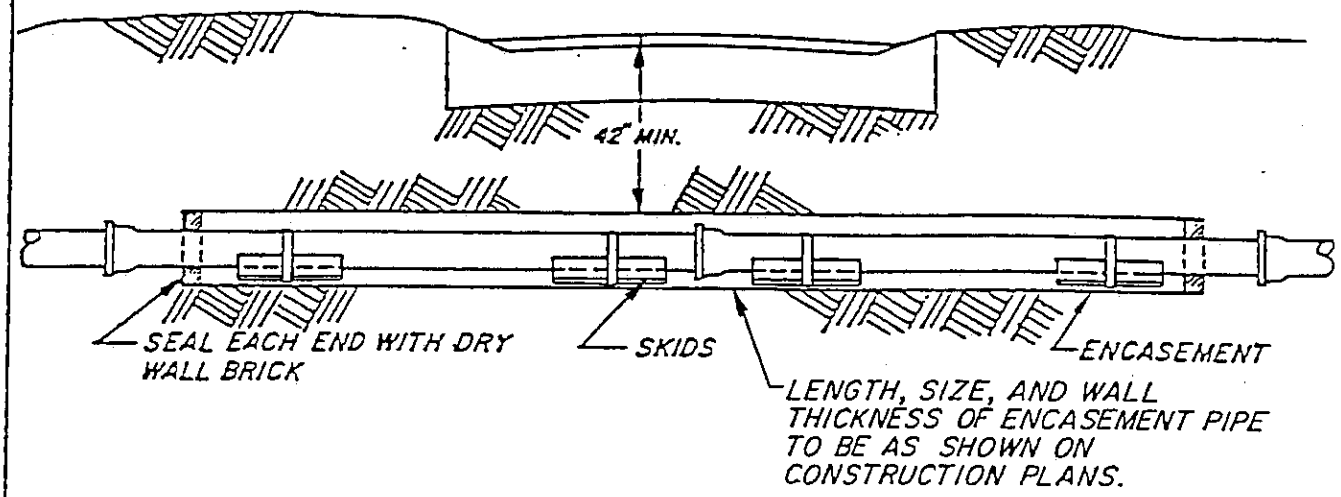

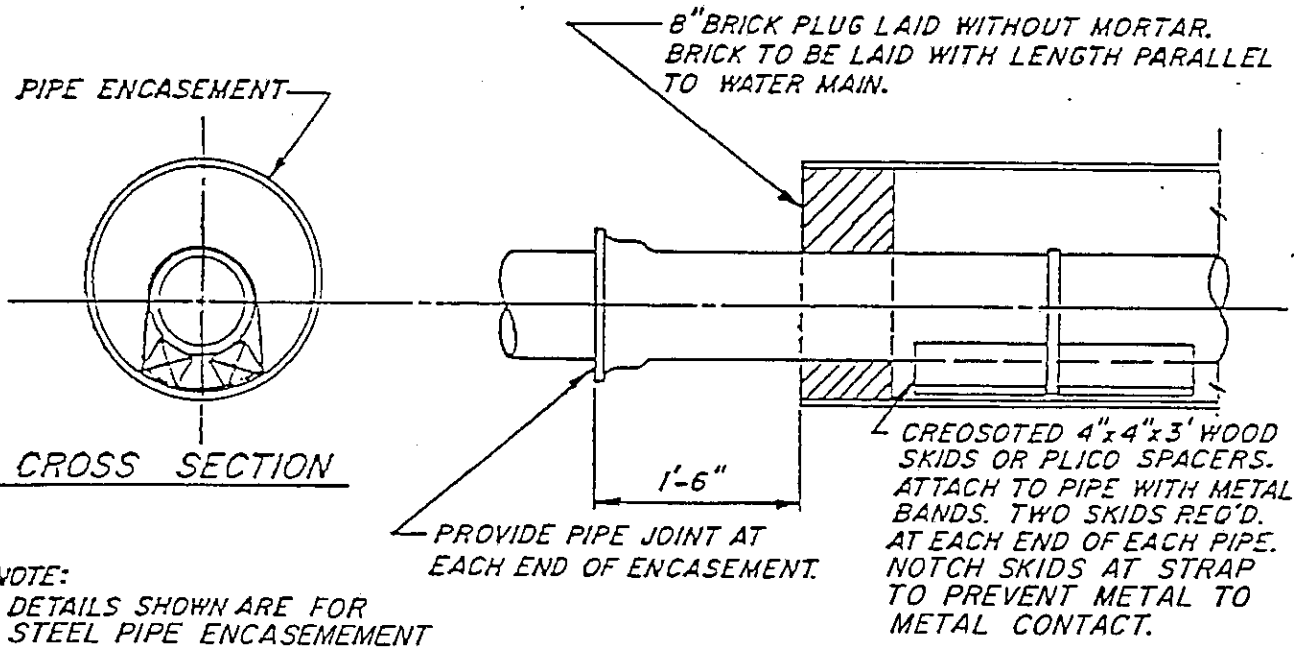

NOTE:
DETAILS SHOWN ARE FOR STEEL PIPE ENCASEMEMENT

ENCASEMENT UNDER ROADWAYS

DRAWING NO. 2

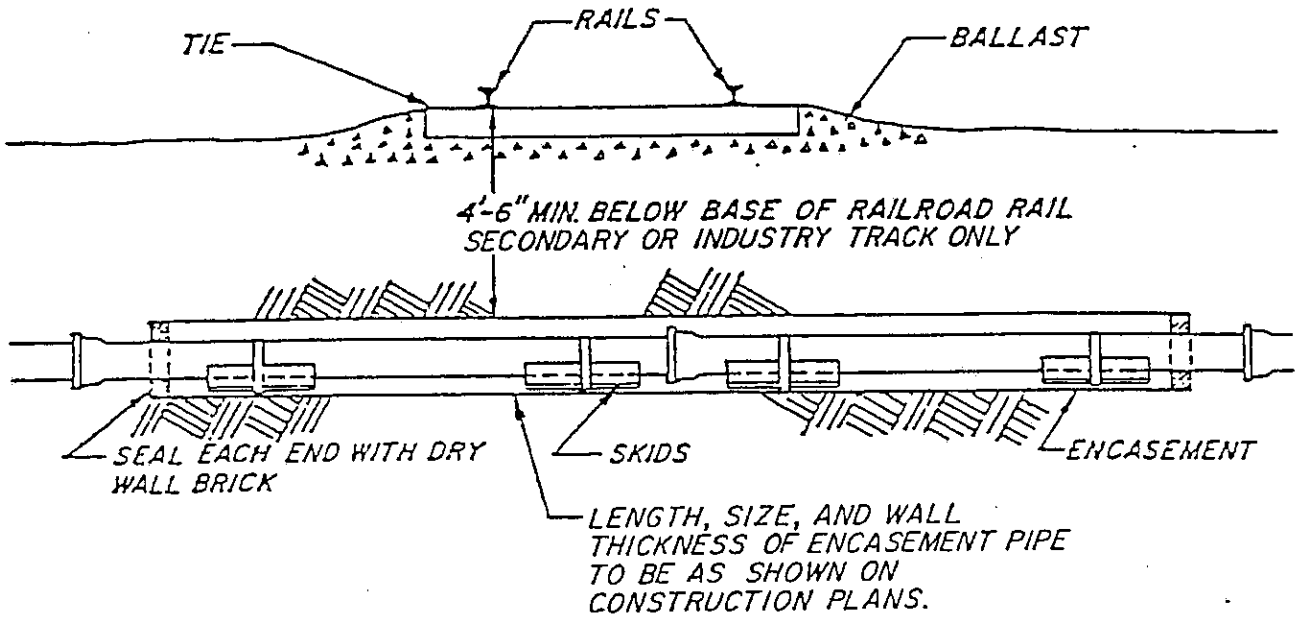

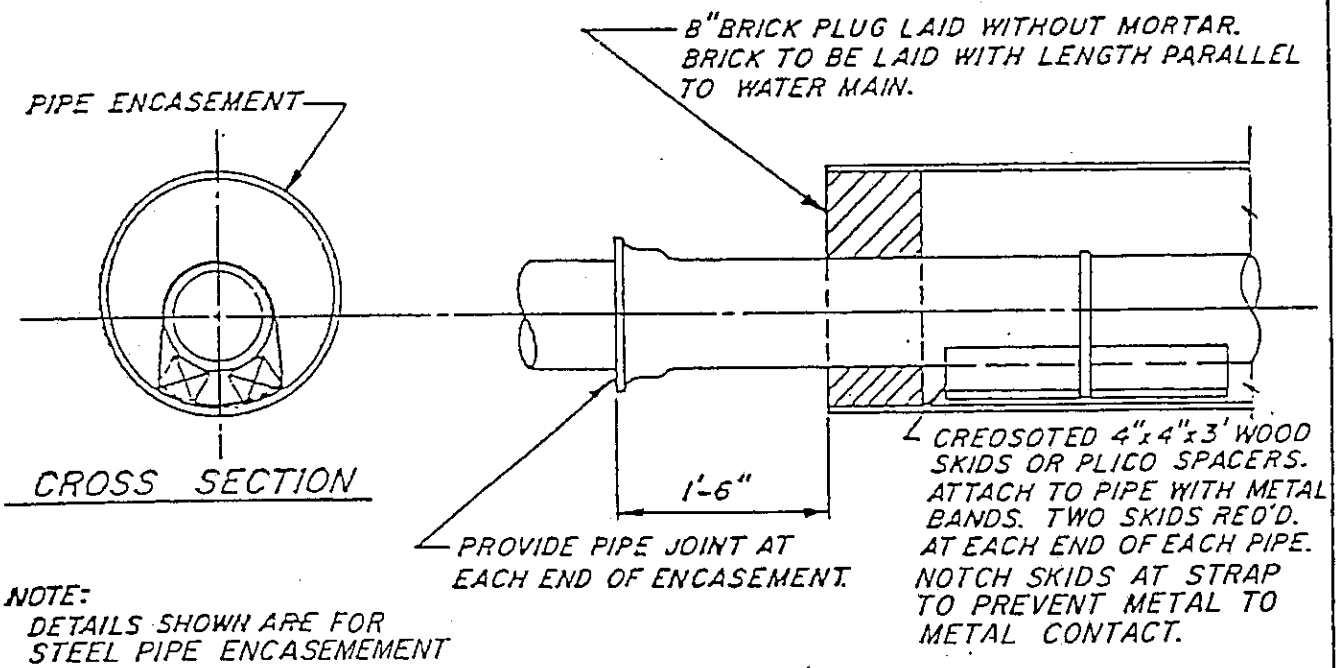

NOTE:
DETAILS SHOWN ARE FOR STEEL PIPE ENCASEMEMENT

ENCASEMENT UNDER RAILROAD

DRAWING NO. 3

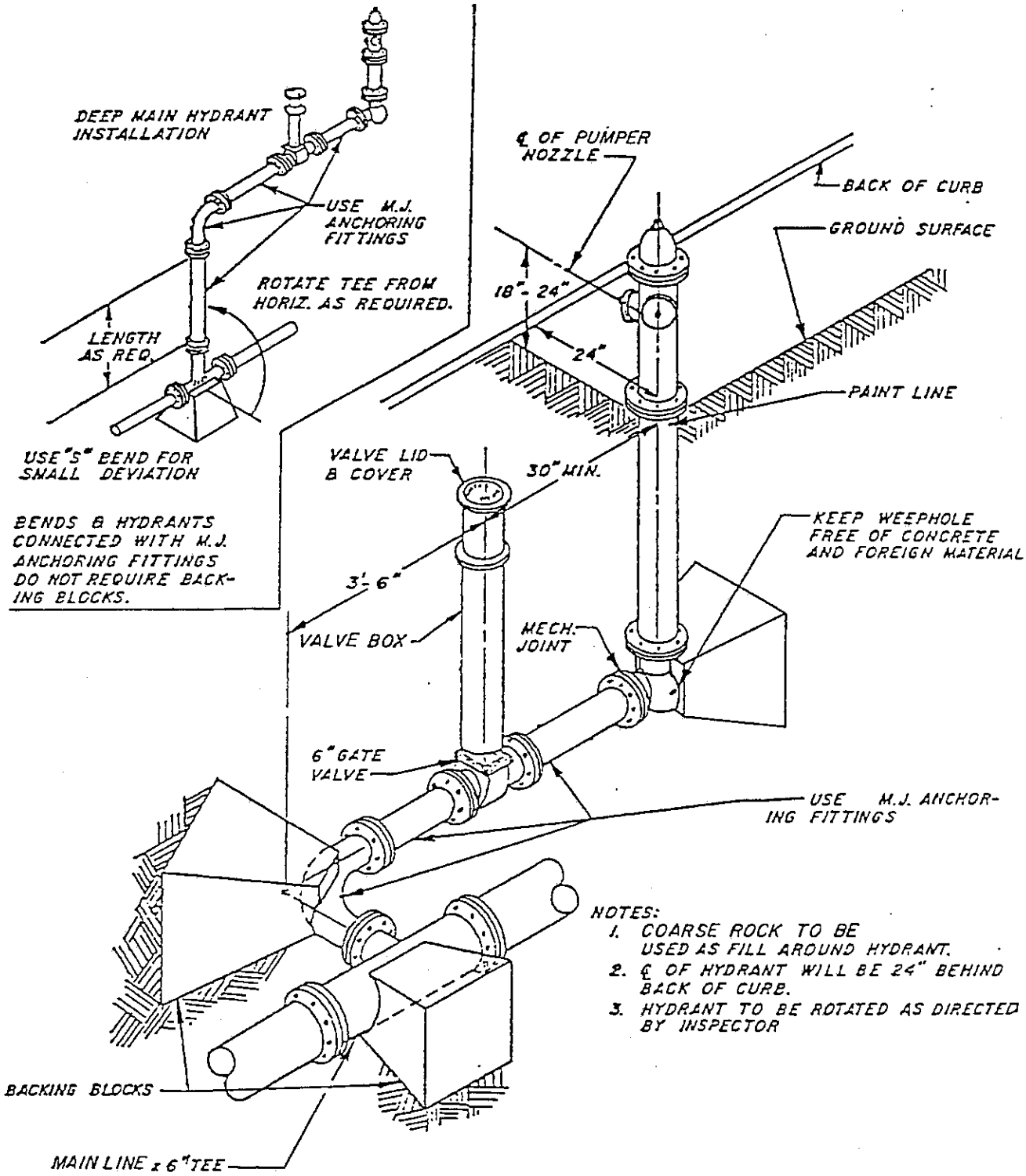

NOTES:

1. COARSE ROCK TO BE USED AS FILL AROUND HYDRANT.
2. ℄ OF HYDRANT WILL BE 24" BEHIND BACK OF CURB.
3. HYDRANT TO BE ROTATED AS DIRECTED BY INSPECTOR

HYDRANT INSTALLATION WITH 90° BEND
(TYPE "A" SETTING)

DRAWING NO. 4

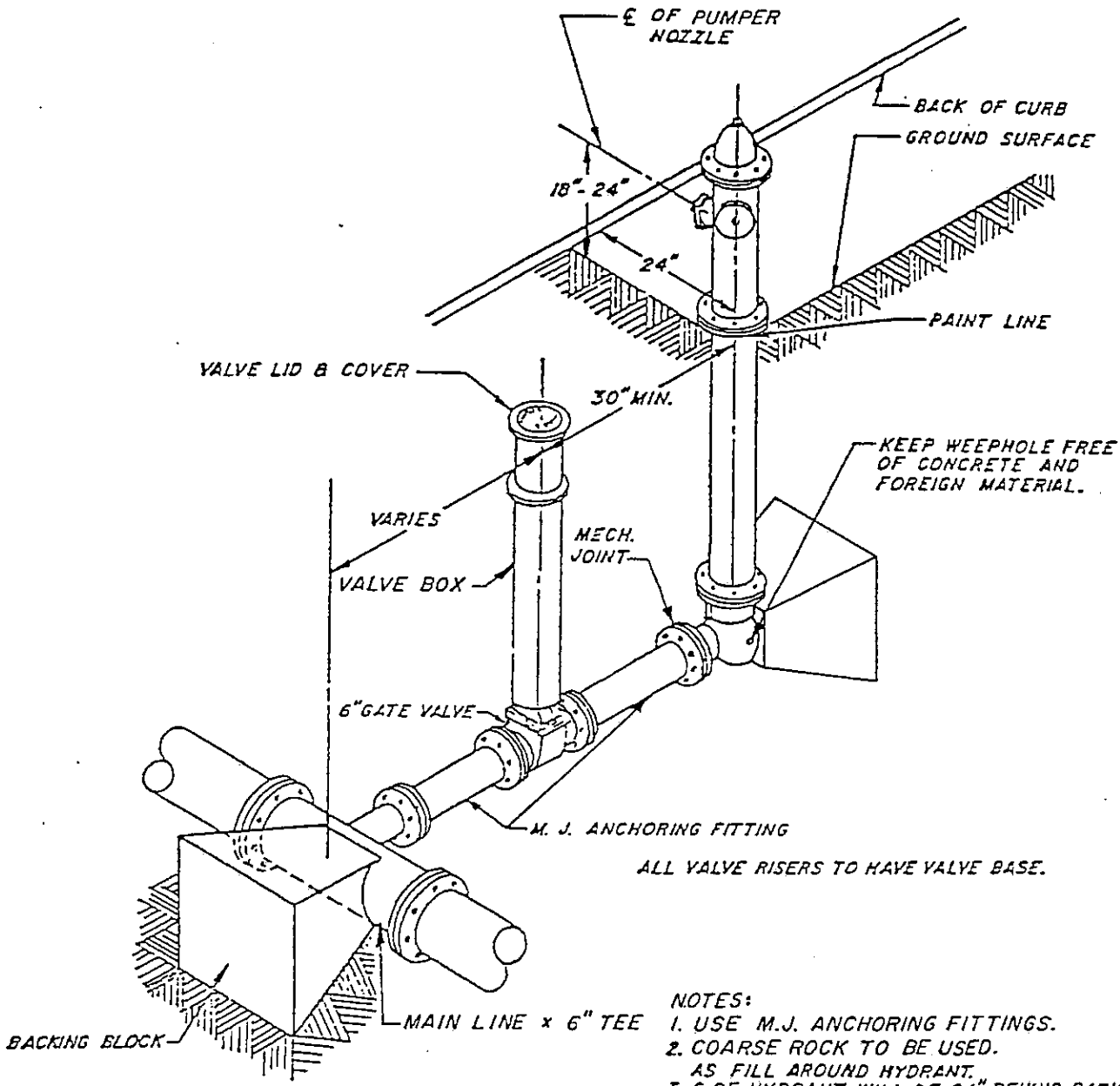

NOTES:
1. USE M.J. ANCHORING FITTINGS.
2. COARSE ROCK TO BE USED. AS FILL AROUND HYDRANT.
3. ℄ OF HYDRANT WILL BE 24" BEHIND BACK OF CURB.
4. HYDRANT TO BE ROTATED AS DIRECTED BY INSPECTOR.

HYDRANT INSTALLATION SET STRAIGHT
(TYPE "B" SETTING)

DRAWING NO. 5

NOTE:

Meter shall be installed after the lines have been sterilized and flushed.

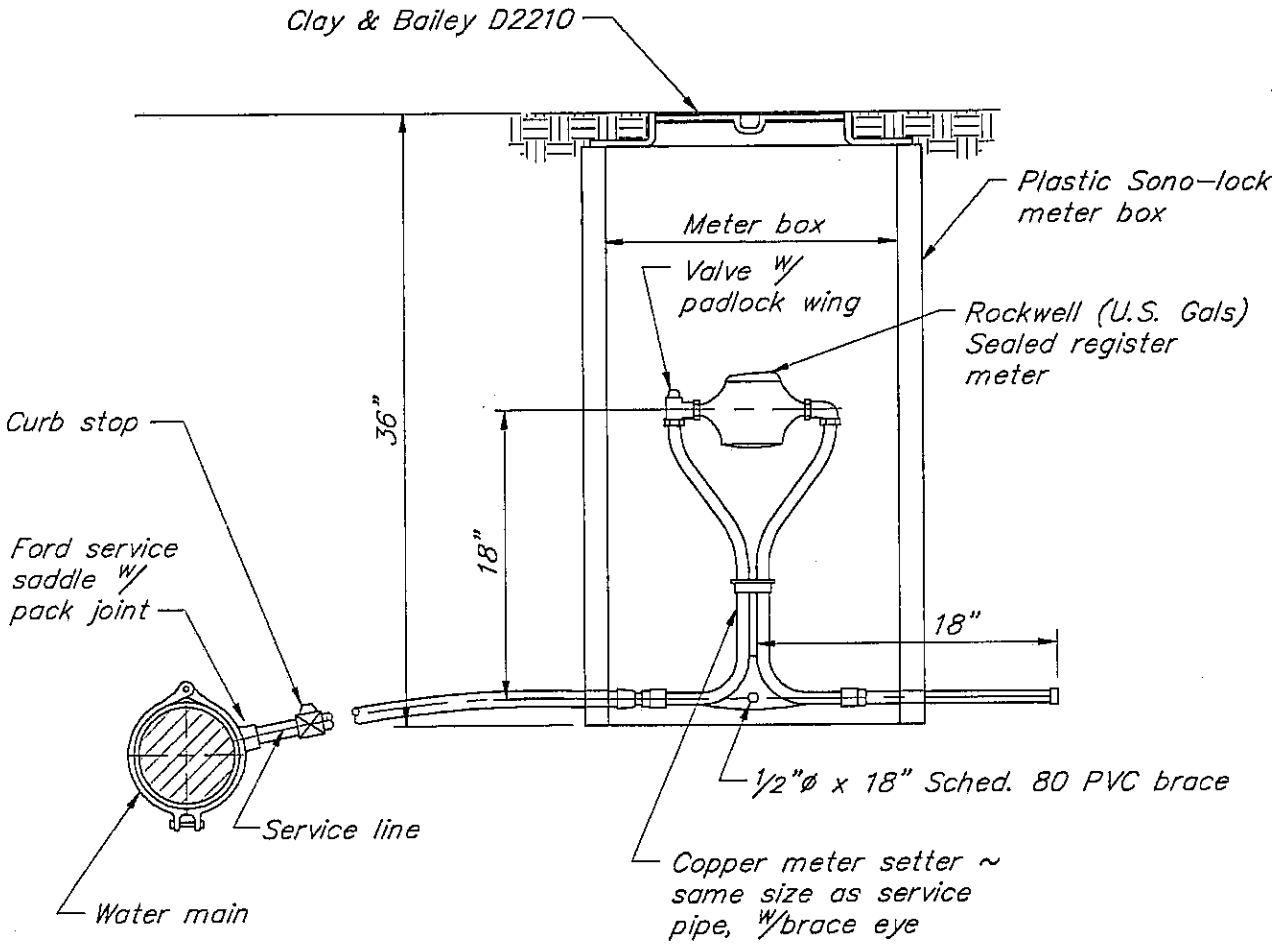

SERVICE CONNECTION DETAIL

DRAWING NO. 6

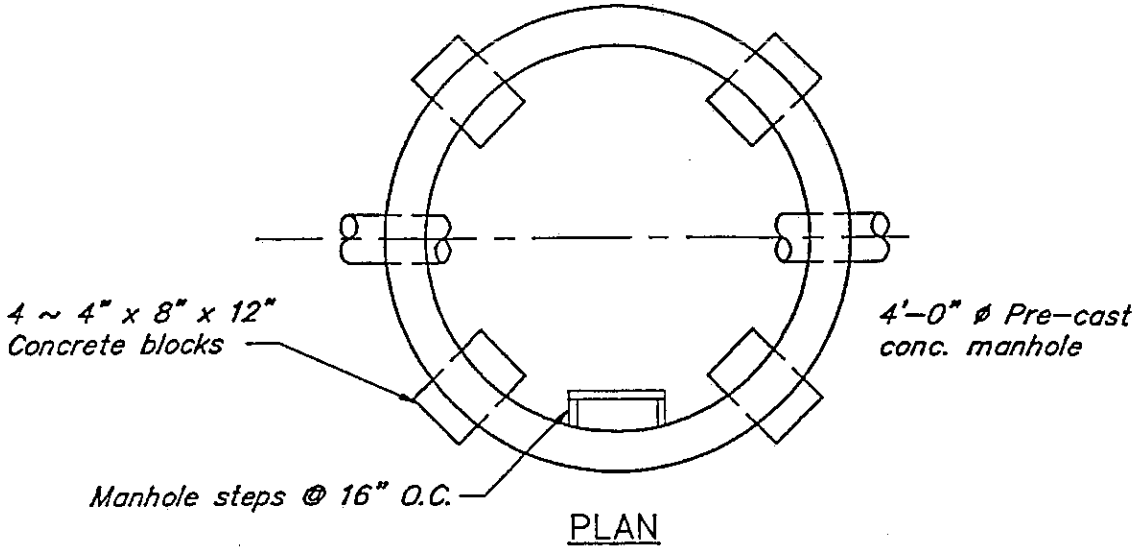

PLAN

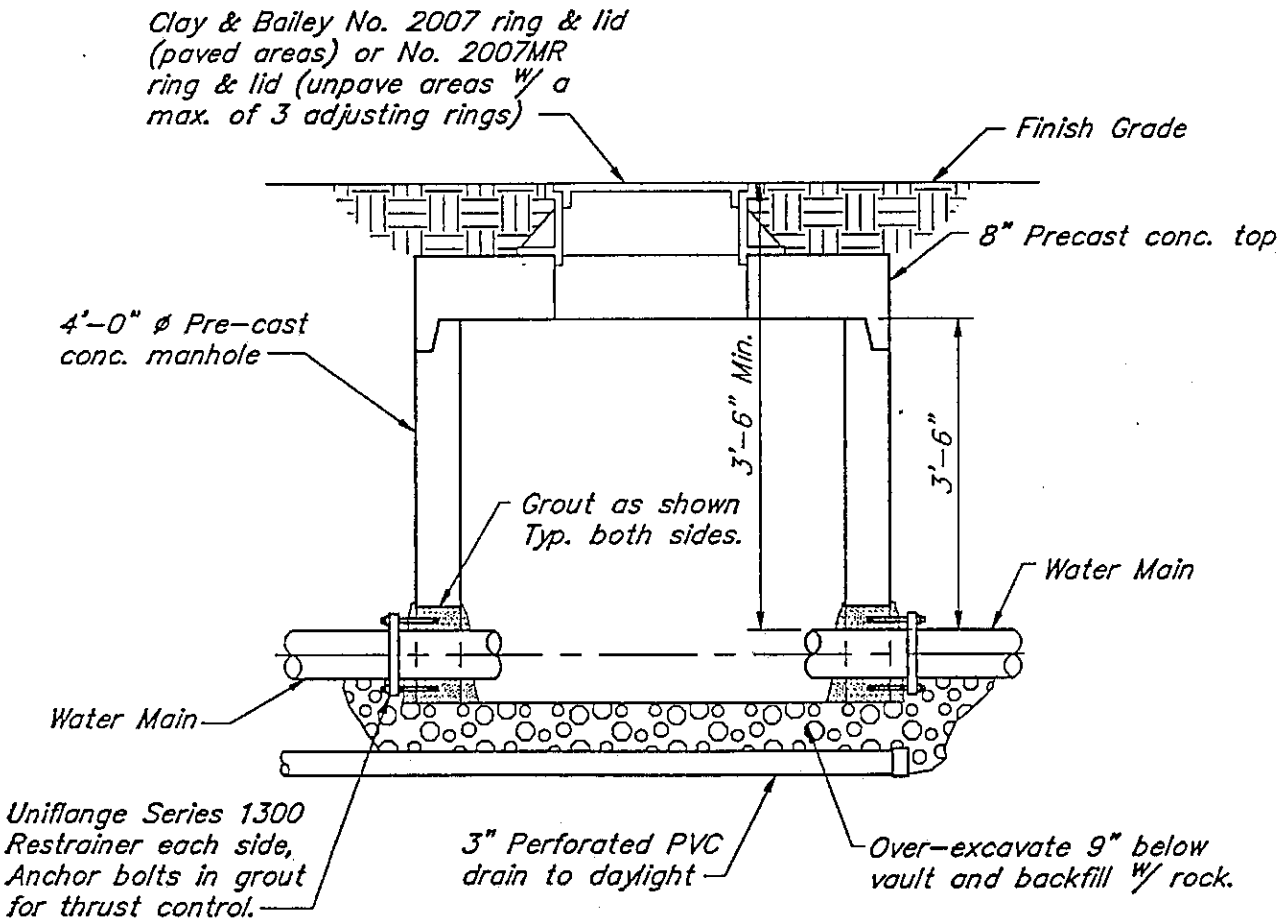

SECTION

PRE-CAST CONCRETE
VAULT

DRAWING NO. 7

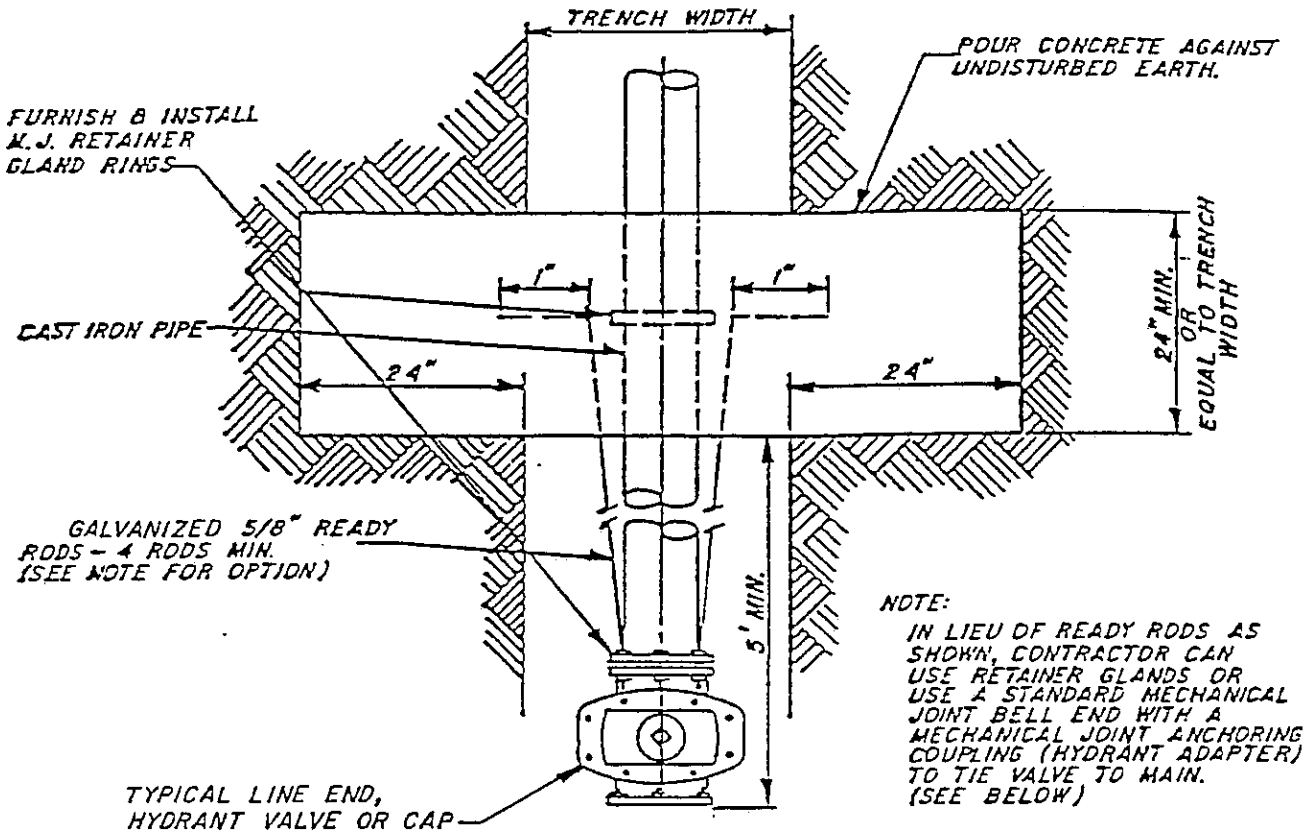

NOTE:
IN LIEU OF READY RODS AS SHOWN, CONTRACTOR CAN USE RETAINER GLANDS OR USE A STANDARD MECHANICAL JOINT BELL END WITH A MECHANICAL JOINT ANCHORING COUPLING (HYDRANT ADAPTER) TO TIE VALVE TO MAIN. (SEE BELOW)

PLAN

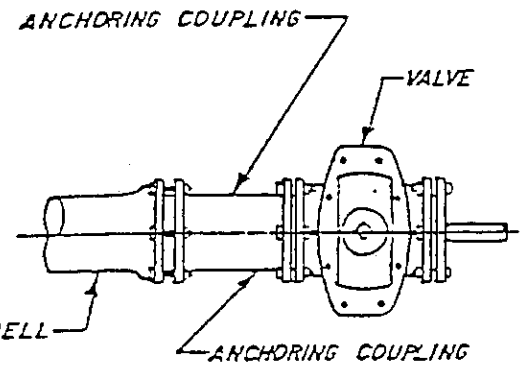

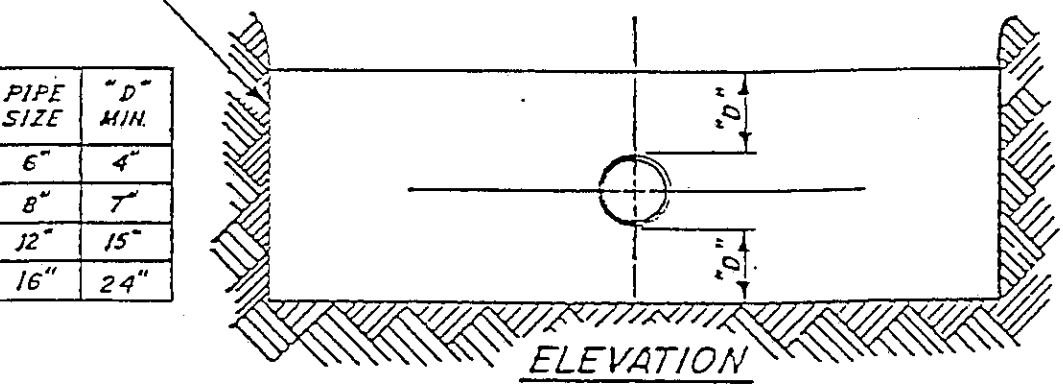

PIPE SIZE	"D" MIN.
6"	4"
8"	7"
12"	15"
16"	24"

ELEVATION

STRADDLE BLOCK

DRAWING NO. 8

NOTE: Construct thrust block at all fittings and hydrants

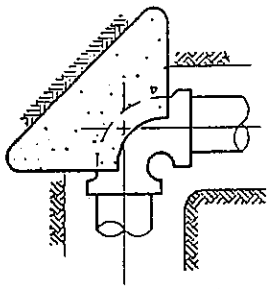

90° BEND

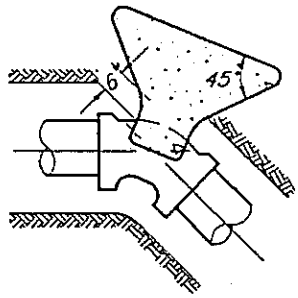

45° BEND OR LESS

Bend #7 rods over pipe & lap weld for full strength.

Note: Vertical face of bearing on earth to be symmetrical about plane formed by ℄'s of intersecting pipe alignments.

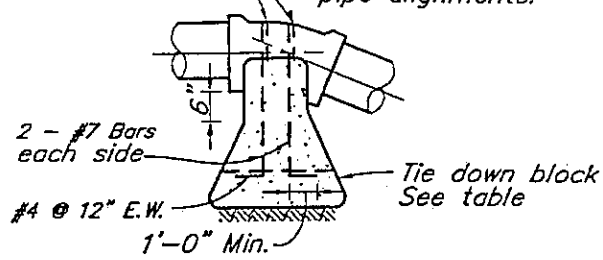

CONCRETE TIE DOWN BLOCK

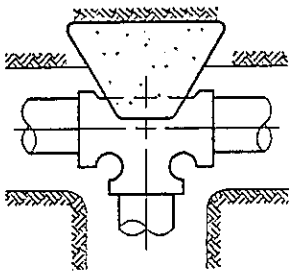

TEE

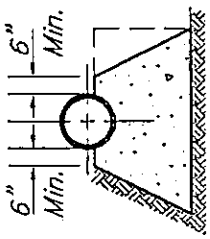

TYPICAL SECTION

Each block shall have same area of bearing surface as called for in table for tee

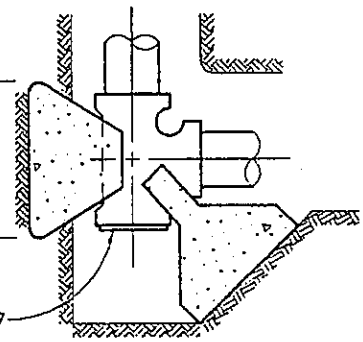

PLUGGED TEE

REQUIRED THRUST BLOCK AREA OF BEARING IN SQUARE FEET BETWEEN CONCRETE AND UNDISTURBED TRENCH WALL

PIPE SIZE	24"	20"	18"	16"	14"	12"	10"	8"	6"	2"–4"
90° BEND	64	44	36	28	22	16	11	7	4	2
45° BEND	35	24	19	15	12	9	6	4	2	1
22 1/2° BEND	18	12	10	8	6	4	3	2	1	1
11 1/4° BEND	9	6	5	4	3	2	1½	1	1	1
TEE	45	31	25	20	15	11	8	5	3	1½

NOTE: Calculations based on working pressure of 150 psi and soil bearing capacity of 1500 psf.

REQUIRED CUBIC FEET OF CONCRETE FOR TIE DOWN BLOCKS

BEND	PIPE SIZE									
	24"	20"	18"	16"	14"	12"	10"	8"	6"	2"–4"
90°	680	470	380	300	230	170	120	75	42	16
45°	480	330	270	210	160	120	85	53	30	11
22 1/2°	260	180	145	115	90	65	45	29	16	6
11 1/4°	130	90	75	60	45	35	23	15	8	3

NOTE: Calculations based on working pressure of 150 psi, unit weight of concrete of 150 psf and a safety factor of 1.5.

BACKING BLOCKS

DRAWING NO. 9

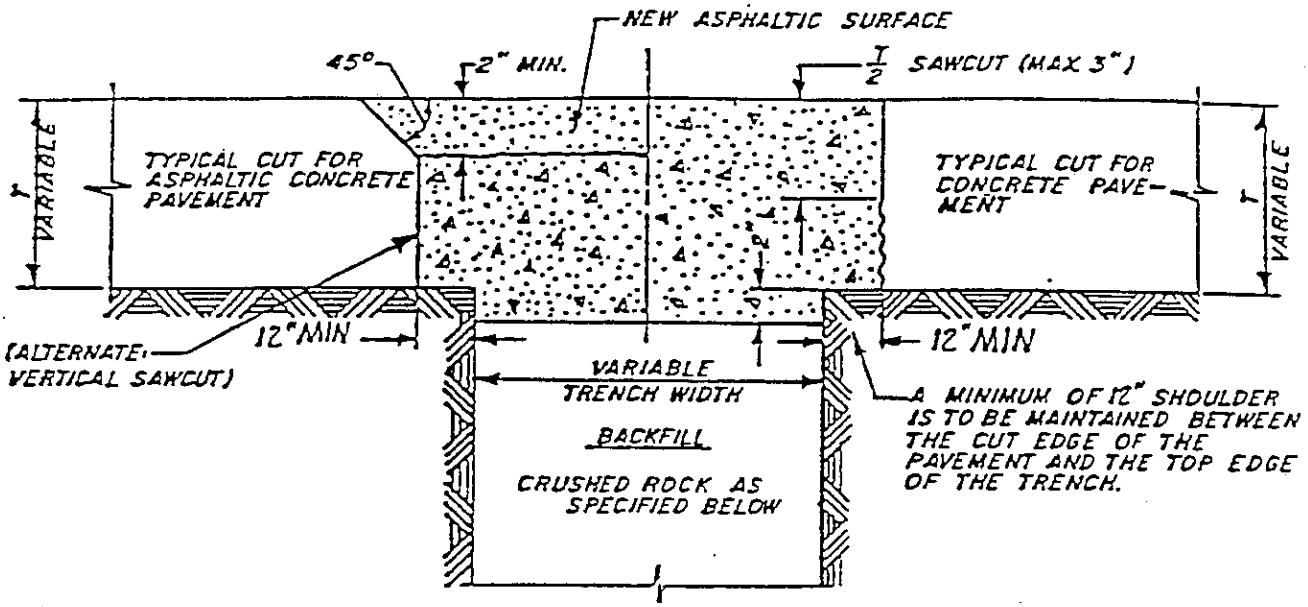

NOTES:

(1) ALL PAVEMENT SHALL BE REPLACED IN KIND AND AS SHOWN ABOVE.

(2) ASPHALTIC CONCRETE REPAIR: ASPHALTIC CONCRETE PAVEMENT IN EXCESS OF 4-INCHES IN THICKNESS SHALL BE REPLACED WITH AN 8-INCH CONCRETE BASE AND 2-INCHES OF ASPHALTIC CONCRETE SURFACE. SCORE THE SURFACE OF THE NEW CONCRETE BASE AFTER INITIAL SET OF THE CONCRETE.

(3) CONCRETE PAVEMENTS: THE CONCRETE SURFACING SHALL EQUAL THE THICKNESS OF THE EXISTING PAVEMENT PLUS 2-INCHES AS SHOWN ABOVE.
FINAL PAVEMENT JOINTS MUST BE PARALLEL OR PERPENDICULAR TO THE STREET CENTERLINE OR AS DIRECTED.
IF PAVEMENT CUT IS WITHIN 3-FEET OF JOINT, PREVIOUS CUT OR CURB, ALL MATERIAL SHALL BE REMOVED TO THE JOINT, CUT, OR CURB.

(4) TEMPORARY SURFACE: IN LIEU OF PLATING, THE CONTRACTOR MAY PROVIDE A TEMPORARY SURFACE USING THE METHOD OF BACKFILL SPECIFIED IN THE SPECIFICATIONS, UP TO WITHIN 2-INCHES OF THE STREET SURFACE. THE TOP 2-INCHES SHALL BE FILLED TO THE SURFACE ELEVATION WITH COLD MIX ASPHALT MIXTURE AND CONTINUOUSLY MAINTAINED UNTIL PERMANENT REPAIR IS MADE.

(5) BACKFILL: THE TRENCH BACKFILL SHALL BE IN CONFORMANCE WITH ONE OF THE FOLLOWING METHODS:
METHOD NO. 1— THE TRENCH SHALL BE FILLED TO SUBGRADE ELEVATION WITH ROCK OF THE FOLLOWING GRADUATION:

SCREEN SIZE—	1"	3/4"	3/8"	NO. 4	NO. 8
% PASSING BY WEIGHT—	100	90-100	20-55	0-10	0-5

THE ROCK SHALL BE COMPACTED IN LIFTS NOT TO EXCEED 5-FEET WITH A SUITABLE COMPACTOR AS APPROVED BY THE WATER DEPARTMENT.

REPAIR OF STREET
CUTS IN HIGH-TYPE PAVEMENT

DRAWING NO. 10

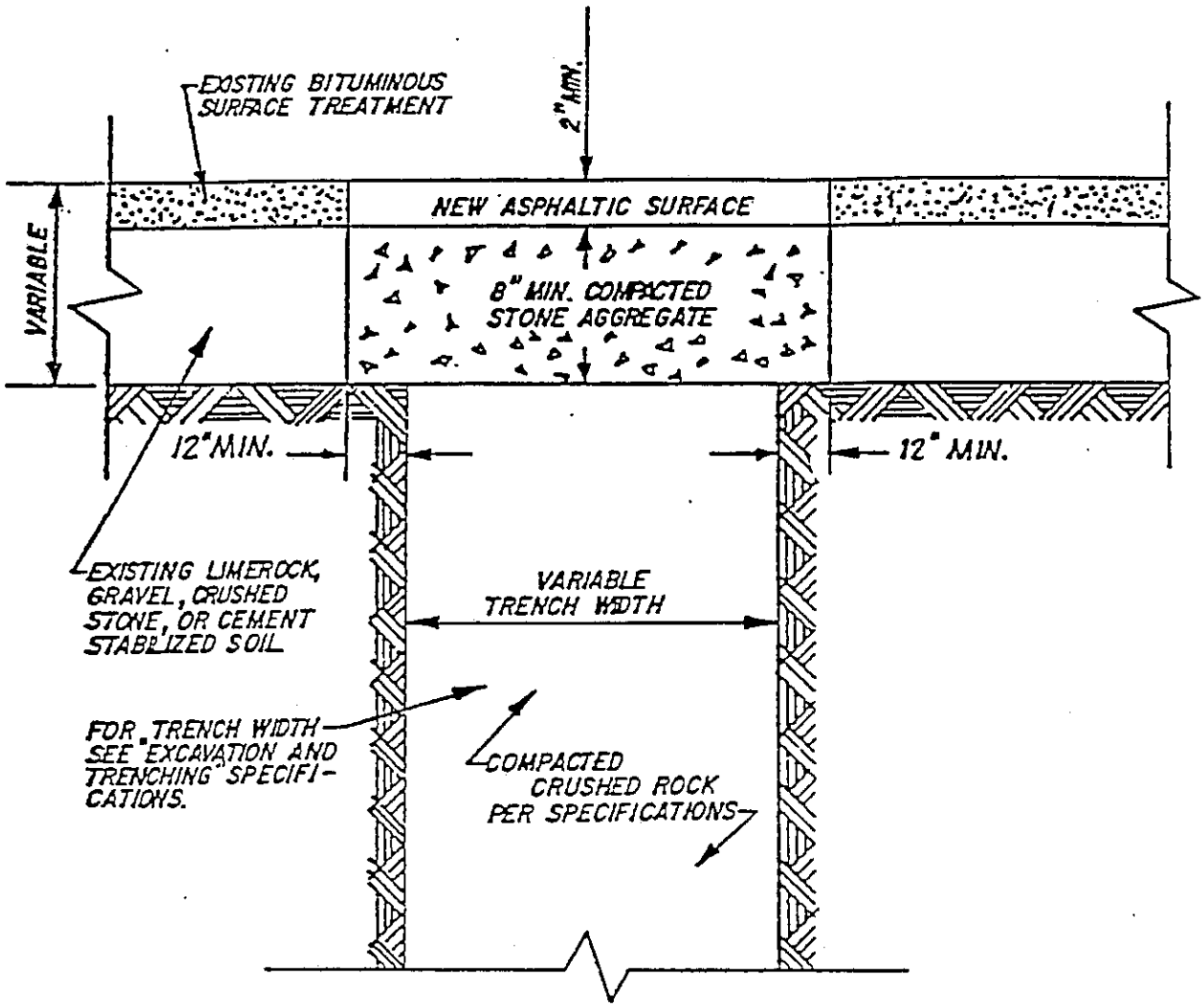

NOTE: PAVEMENT IS TO BE REPLACED WITH A MINIMUM OF 8" OF COMPACTED STONE AGGREGATE OVERLAID WITH AN ASPHALTIC SURFACE COURSE OF 2" MINIMUM THICKNESS.

REPAIR OF CUTS
IN LOW-TYPE PAVEMENT

DRAWING NO. 11

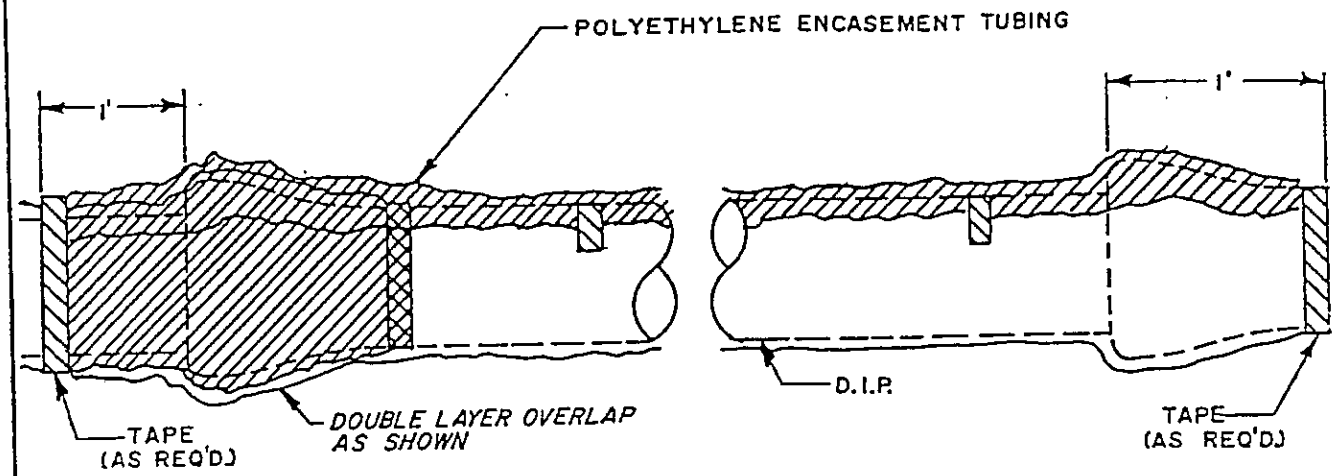

METHOD A

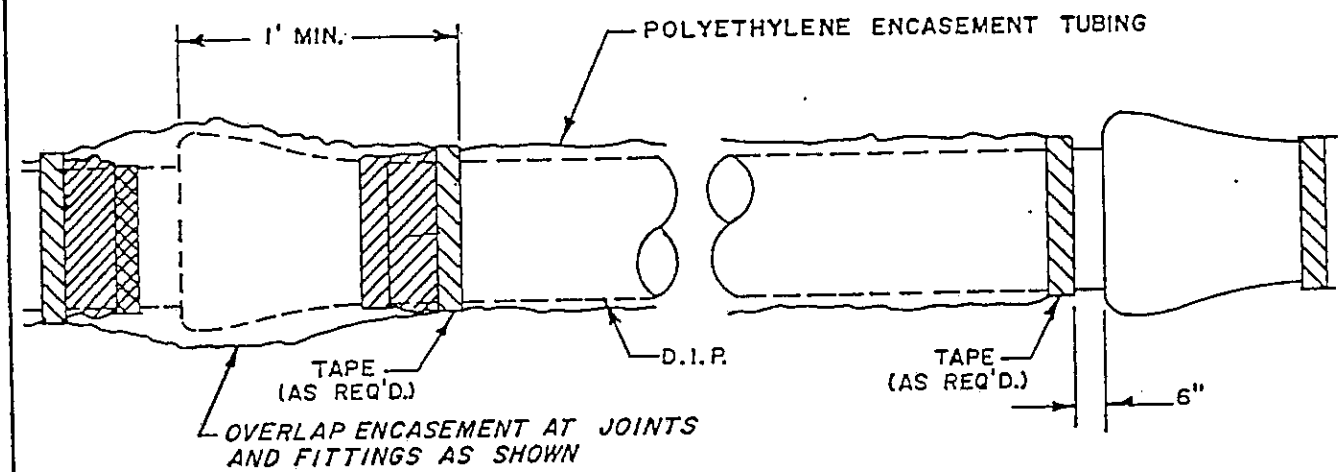

METHOD B

NOTES:

1. REFER TO SECTION 2020 OF STANDARD SPECIFICATIONS FOR ADDITIONAL DETAILS.

POLYETHYLENE ENCASEMENT
FOR DUCTILE IRON PIPE

DRAWING NO. 12

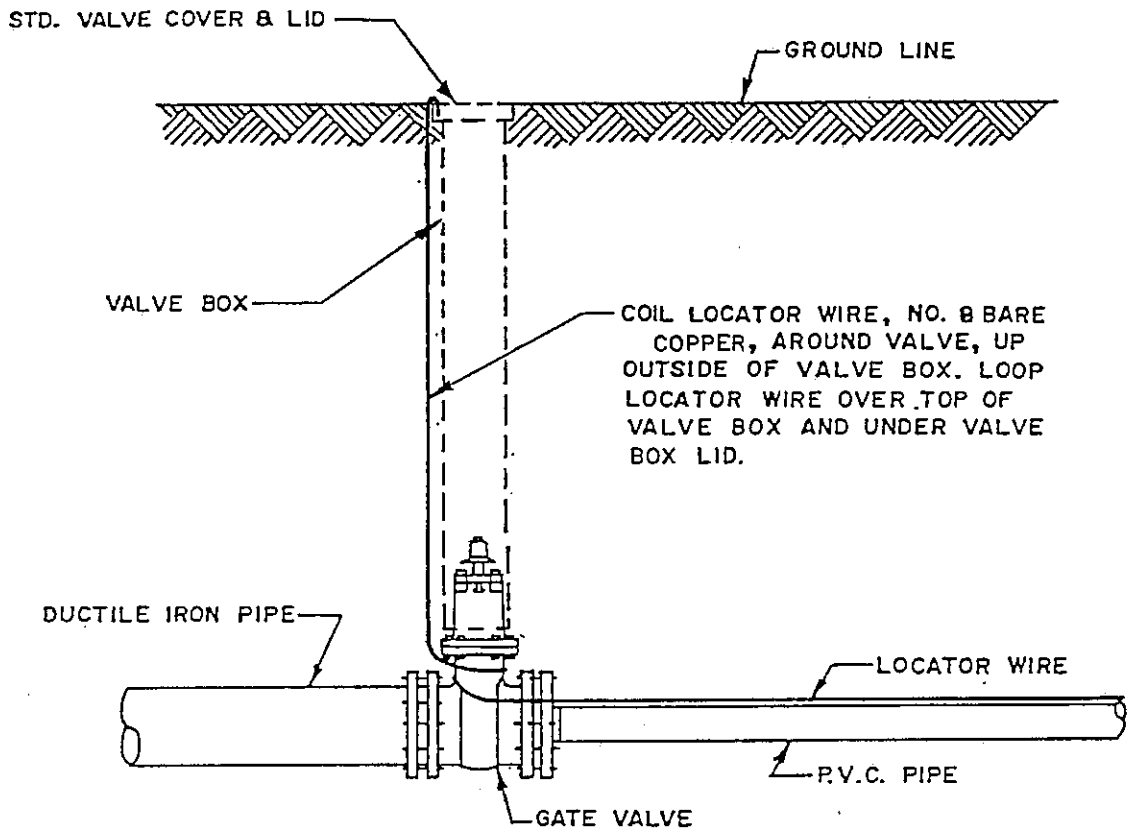

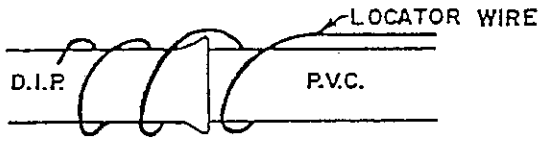

MID-LINE CONNECTION

LOCATOR WIRE FOR PVC PIPE

DRAWING NO. 13

B. CONSTRUCTION STANDARDS FOR SEWER MAIN EXTENSIONS AND RELOCATIONS

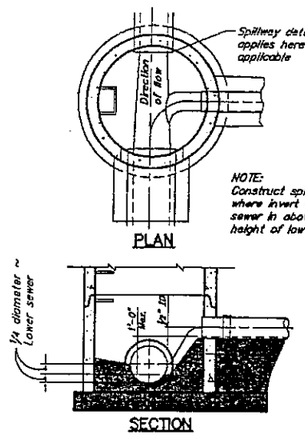

SPILLWAY IN MANHOLE

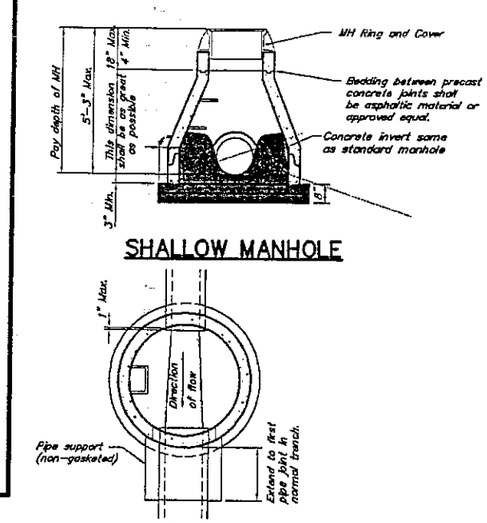

SHALLOW MANHOLE

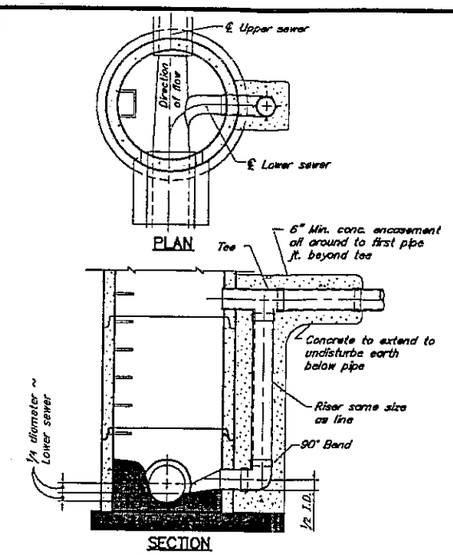

STANDARD DROP MANHOLE

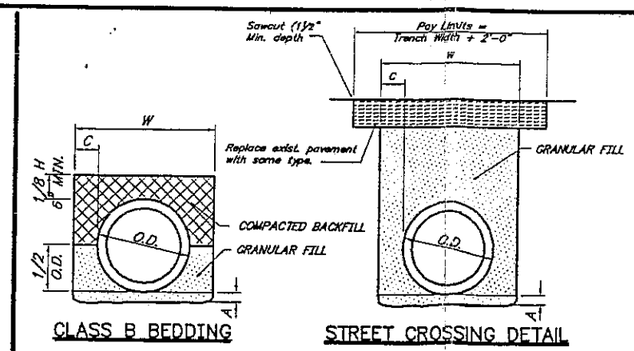

CLASS B BEDDING

STREET CROSSING DETAIL

NOTES:

1. A & C = ABSOLUTE MIN. CLEARANCE FROM PIPE WALL TO ANY PROJECTION OF TRENCH BOTTOM OR WALL.
   A (EARTH EXCAV.) 2", CLASS B.
   A (ROCK EXCAV.) 6", CLASS B.
   C = 8"
2. W = TRENCH WIDTH AT A LEVEL 6" ABOVE TOP OF PIPE.
   W = MIN. OF 16" PLUS (O.D., O.S. OR S).
   W = MAX. OF 24" PLUS (O.D., O.S. OR S).
3. H = TRENCH HEIGHT, TOP OF PIPE TO FINISHED GRADE
4. WHERE SCREEDING SHOWN, FORM BED WITH SCREED CUT TO EXACT SHAPE OF PIPE BOTTOM.
5. = GRANULAR FILL.
6. = PRECAST CONCRETE
7. = CAST-IN-PLACE CONCRETE
8. = COMPACTED TRENCH BACKFILL
9. = UNDISTURBED EARTH
10. ALL BEDDING CLASS B, EXCEPT AS CALLED OUT ON PLANS.
11. SEE SPECIFICATIONS FOR TRENCH BOTTOM STABILIZATION, IF REQUIRED.

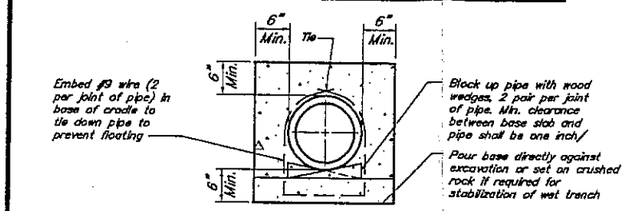

CONCRETE ENCASEMENT

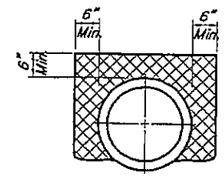

PIPE TRENCH

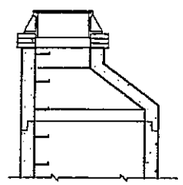

STANDARD UPPER SECTION

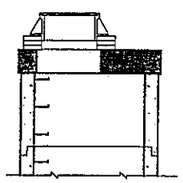

FLAT SLAB UPPER SECTION

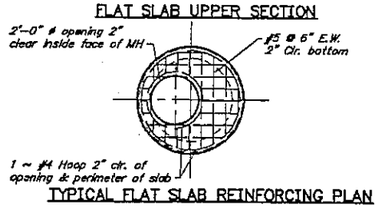

TYPICAL FLAT SLAB REINFORCING PLAN

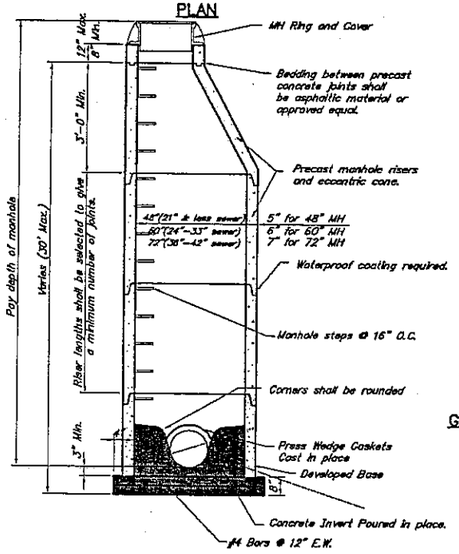

SECTION

STANDARD MANHOLE

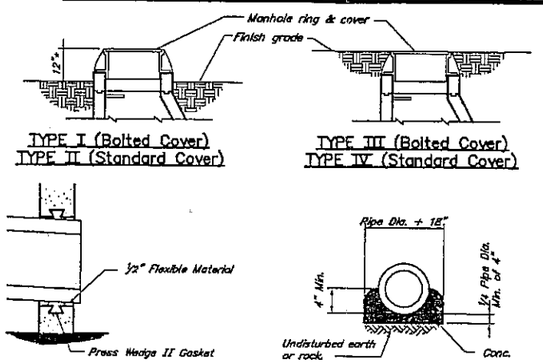

GASKET DETAIL

PIPE SUPPORT DETAIL

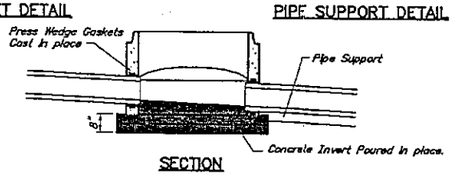

SECTION

NOTES:

1. CLEARANCE TOLERANCE OF PIPE OPENINGS (NON-GASKETED ONLY): THE MAXIMUM ALLOWABLE PIPE OPENING ON A HORIZONTAL AXIS SHALL BE THE OUTSIDE DIAMETER OF THE PIPE PLUS 12 INCHES.
   THE MAXIMUM ALLOWABLE PIPE OPENING ON A VERTICAL AXIS SHALL BE THE OUTSIDE DIAMETER OF THE PIPE PLUS 8 INCHES. THE MINIMUM CLEARANCE BETWEEN THE OUTSIDE SURFACE OF AN INSTALLED PIPE AND THE CONCRETE OF THE MANHOLE SHALL BE 2 INCHES. THE MAXIMUM OPENINGS ALLOWABLE FOR THE DROP MANHOLE ENTRY IN THE BARREL SHALL BE THE OUTSIDE DIAMETER OF THE PIPE PLUS 12 INCHES.
2. INSTALLATION OF PIPE OPENINGS:
   ALL REQUIRED PIPE OPENINGS SHALL BE PRECAST IN MANHOLE UNITS. FIELD ALTERATIONS OF OPENINGS WILL BE PERMITTED PROVIDED WALLS ARE SCORED WITH A MASONRY SAW TO A DEPTH SUFFICIENT TO SEVER REINFORCING STEEL. A CHIPPING HAMMER MAY THEN BE USED TO REMOVE THE CONCRETE. MINIMUM DISTANCE BETWEEN ANY TWO ADJACENT PIPE OPENINGS SHALL BE 4 INCHES.
3. THE PRECAST DEVELOPED BASE MANHOLE SHALL CONFORM TO A.S.T.M. C-478 SPECIFICATIONS.
4. NO PIPE SUPPORT (P.C.C.) REQUIRED IF MANHOLE IS GASKETED.
5. THERE SHALL BE AT LEAST 1/2" OF FLEXIBLE MATERIAL BETWEEN PIPE AND THE INVERT ON GASKETED INSTALLATION.
6. PIPE OPENINGS SHALL BE WITHIN THE FOLLOWING TOLERANCES OF PLAN LOCATIONS: 1" VERTICAL, 3" HORIZONTAL.
7. IF CRUSHED ROCK IS USED UNDER MANHOLE IT SHALL BE LEVELED OVER THE ENTIRE EXCAVATED SECTION.
8. PRESS WEDGE II PIPE TO MANHOLE GASKET, OR APPROVED EQUAL SHALL BE CAST INTO DEVELOPED BASE. (GASKETED ONLY)

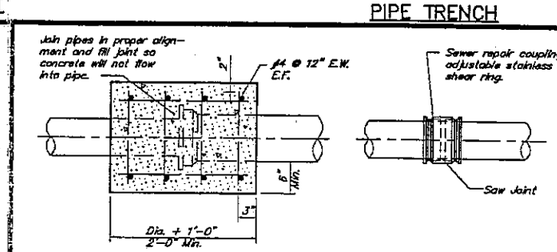

CONCRETE COLLAR

MECHANICAL COUPLING

COUPLING DETAILS

CASING SCHEDULE FOR CROSSINGS

PVC CARIER PIPE DIAMETER	4"	6"	8"	10"	12"	14"	16"	18"	20"
MINIMUM CASING DIAMETER	10"	12"	14"	16"	18"	20"	24"	30"	30"

Casing wall thickness shall be 1/4" thick for casing pipe 10" thru 16", 3/8" thick for casing pipe 18" thru 24", 1/2" thick for 30".

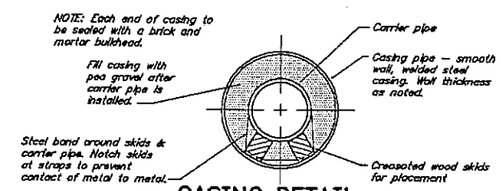

CASING DETAIL
(FOR ALL BORED CROSSING)

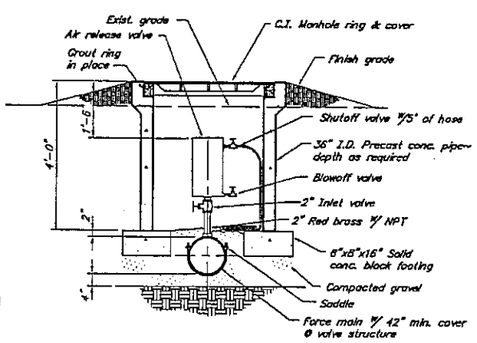

AIR RELEASE VALVE
Scale: 1/2" = 1'-0"

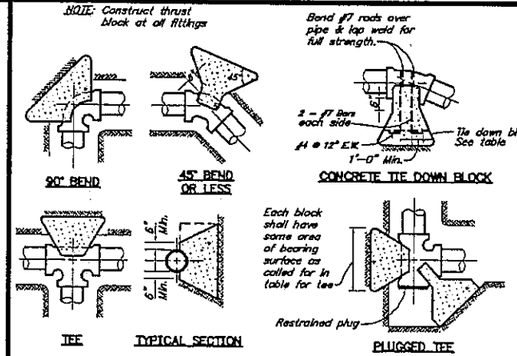

THRUST BLOCK DETAILS

Note: Vertical face of bearing on earth to be symmetrical about plane formed by ℄'s of intersecting pipe alignments.

REQUIRED THRUST BLOCK AREA OF BEARING IN SQUARE FEET BETWEEN CONCRETE AND UNDISTURBED TRENCH WALL

PIPE SIZE	24"	20"	18"	16"	14"	12"	10"	8"	6"	2"-4"
90° BEND	64	44	36	28	22	16	11	7	4	2
45° BEND	35	24	19	13	12	9	6	4	2	1
22 1/2° BEND	18	12	10	8	6	4	3	2	1	1
11 1/4° BEND	9	6	5	4	3	2	1 1/2	1	1	1
TEE	45	31	25	20	15	11	8	5	3	1 1/2

NOTE: Calculations based on working pressure of 150 psi and soil bearing capacity of 1500 psf.

REQUIRED CUBIC FEET OF CONCRETE FOR TIE DOWN BLOCKS

BEND	PIPE SIZE									
	24"	20"	18"	16"	14"	12"	10"	8"	6"	2"-4"
90°	680	470	380	300	230	170	120	75	42	16
45°	480	330	270	210	160	120	85	53	30	11
22 1/2°	260	180	145	115	90	65	45	29	16	6
11 1/4°	130	90	75	60	45	35	23	15	8	3

NOTE: Calculations based on working pressure of 150 psi, unit weight of concrete of 150 psf and a safety factor of 1.5.

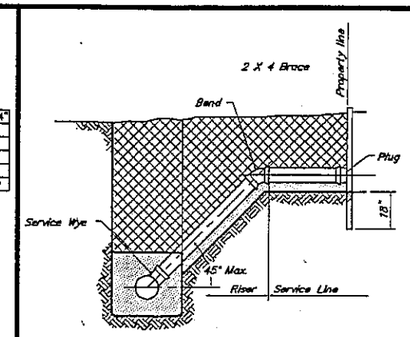

STANDARD INSTALLATION
SERVICE LINE AND RISER DETAILS

Larkin Associates
Consulting Engineers, Inc.

CONSTRUCTION STANDARDS
FOR
SEWER MAIN EXTENSIONS AND RELOCATIONS

CITY, STATE

JOB NO.. DATE: . CH'KD: .
SCALE: NTS DRAWN: . APPVD: . SH. . OF .

IV. STREET DESIGN STANDARDS

DESIGN CRITERIA

SECTION 5200 STREETS

Adapted from criteria published by the
Kansas City Metropolitan Chapter
of the American Public Works Association
for the City of Baldwin City, Kansas

Table of Contents

Section	Title
5201	**GENERAL**
5201.1	Introduction
5201.2	Definitions
5201.3	Abbreviations
5201.4	Governing Specifications
5202	**FUNCTIONAL CLASSIFICATION OF STREETS**
5202.1	Major Arterial Streets
5202.2	Minor Arterial Streets
5202.3	Industrial/Commercial Collector
5202.4	Residential Collector Streets
5202.5	Residential Local Streets
5202.6	Residential Access Streets
5203	**GENERAL STREET DESIGN CRITERIA**
5203.1	Design Criteria
5203.2	Maximum and Minimum Gradient
5203.3	Shoulder Gradients
5203.4	Tangent Length
5203.5	Off-Center Street Intersections
5203.6	Intersection Angle
5203.7	Intersecting Minor/Major Arterial Streets
5203.8	Curb Radii
5203.9	Sight Distance at Intersecting Streets
5203.10	Considerations For Connection to Existing and Future Streets
5203.11	Pavement Section
5203.12	Pavement Transition
5203.13	Cul-De-Sacs
5203.14	Temporary Turn-Arounds
5203.15	Driveway Grades
5203.16	Access for the Disabled
5203.17	Street Lighting
5203.18	Storm Drainage
5203.19	Underdrains
5203.20	Erosion Control Within R/W Limits
5203.21	Survey Monument Boxes
5203.22	Traffic Impact Studies
5203.23	Obstructions
5203.24	Other Design Criteria
5203.25	Landscaping

5204 **GENERAL PLAN REQUIREMENTS**
5204.1 Scope
5204.2 General
5204.3 Scales
5204.4 Sheet Sizes
5204.5 Types of Sheets in Plans
5204.6 Required Information for Title Sheet
5204.7 Required Information for General Layout Sheet
5204.8 Required Information for Planed and Profile Sheets
5204.9 Required Information for Cross-Section Sheets
5204.10 Required Information for Standard and Special Detail Sheets
5204.11 Required Information for Lighting Plans
5204.12 Required Information for Traffic Control Plan Sheets
5204.13 Required Information for Temporary Erosion Control Plan Sheets

5205 **FIGURES**
FIGURE 1 - Design Controls for Sag Vertical Curves
FIGURE 2 - Design Controls for Crest Vertical Curves
FIGURE 3 - Off-Center Street Intersections
FIGURE 4 - Typical Residential Street Layout
FIGURE 5 - Survey Monument Box

5206 **TABLES**
TABLE 1 - Street Pavement Types

5207 **STANDARD DRAWINGS**

DIVISION IV
DESIGN CRITERIA

SECTION 5200 STREETS

SECTION 5201 GENERAL

5201.1 **Introduction:** The purpose of this criteria is to provide uniform procedures for designing and checking the design of streets in the City of Baldwin City, Kansas. Specific criteria have been developed and are applicable to the types of conditions ordinarily encountered in local urban and suburban areas. Other special situations may be encountered that require added criteria or more complex design than included herein.

In addition to this criteria, street improvements shall be designed to conform to applicable codes, regulations, and ordinances as established by the local governing agency. Streets shall be designed in accordance with the classifications determined by the local governing agencies and shall conform to the Standard Drawing Typical Sections, unless otherwise approved. Plans for said improvements shall be submitted to the local governing agency for approval and shall include all information as may be required or described hereinafter.

5201.2 **Definitions:**

A. **City Engineer:** The term City Engineer, as used in this criteria, shall represent the state, county, city, or other governmental body's representative responsible for technical decisions concerning the project. Such person may be the Director of Public Works, City or County Engineer, Administrator or any other person empowered by the governing agency to make such decisions.

B. **Engineer:** The term Engineer, as used in this criteria, shall represent the Engineer or Designer who performs the actual design work. The design shall be accomplished under the direction of a Registered Professional Engineer. Nothing in this criteria is intended to alter or circumvent local, state, or federal laws or regulations regarding liability and/or responsibility for such designs.

C. **Urban Density Subdivision:** A residential subdivision with lots smaller than three (3) acres.

D. **Rural Density Subdivision:** A residential subdivision with lots three (3) acres or larger.

5201.3 **Abbreviations:**

AASHTO	American Association of State Highway and Transportation Officials
ADT	Average Daily Traffic
APWA	American Public Works Association
ASTM	American Society for Testing and Materials
FHWA	U.S. Department of Transportation/Federal Highway Administration

KDOT	Kansas Department of Transportation
MUTCD	Manual of Uniform Traffic Control Devices
NGVD	National Geodetic Vertical Datum
ITE	Institute of Transportation Engineers
R/W	Right-of-Way

5201.4 **Governing Specifications:** Design shall be in accordance with the latest edition of the following specifications and the current interim supplements thereto except as modified herein or modified for the specific project:

A. A Policy on Geometric Designs of Highways and Streets, AASHTO.

B. Manual on Uniform Traffic Control Devices for Streets and Highways, FHWA.

C. Roadside Design Guide, AASHTO.

D. Design of Pavement Structures, AASHTO.

5201.5 **Governing Construction Specifications:** Construction shall be in accordance to the latest edition of the Standard Specifications for State Road and Bridge Constructions, KDOT.

SECTION 5202 FUNCTIONAL CLASSIFICATION OF STREETS:

5202.1 **Major Arterial Streets:** Streets that serve the highest traffic volume corridors and the longest trip. Provides travel between business districts and outlying residential areas, between major inner city communities and between major suburban centers, and connects communities to major state and interstate highways. No or limited access is allowed from residential streets. Access is usually partially controlled. Spacing of major arterial streets is generally from one mile to five miles.

5202.2 **Minor Arterial Streets:** Streets that interconnect and augment the major arterial streets. No or limited access is allowed from residential lots. Accommodate trips of moderate length at a lower level of travel mobility than major arterial streets. Spacing of minor arterial streets are generally from one half mile to three miles.

5202.3 **Industrial/Commercial Collector:** Streets that collect traffic to and from commercial or industrial areas and distribute it to arterial streets.

5202.4 **Residential Collector Streets:** Streets that collect traffic to and from residential areas and distribute it to arterial streets. Limited access is allowed from residential lots. Desirable maximum ADT = 3,000 for residential collector streets.

5202.5 **Residential Local Streets:** Streets that only carry traffic having its origin or destination within the immediate neighborhood. Desirable maximum ADT = 1,000 for local streets. (ADT = ten trips per day per typical single-family residence.)

5202.6 **Residential Access Streets:** Streets that carry traffic between residential lots and residential local streets or residential collector streets. Residential access streets usually carry no through traffic and include short loop streets, cul-de-sacs, and courts. Desirable maximum ADT = 200 for cul-de-sacs and 400 for loop streets. Maximum length of cul-de-sacs = 500 feet and 1,000 feet for loop streets. (ADT = ten trips per day per typical single-family residence.)

SECTION 5203 GENERAL STREET DESIGN CRITERIA:

5203.1 **Design Criteria:** This section governs the general design requirements for the following street classifications (see notes on page 52-5):

	Arterial	Industrial/ Commercial Collector
Number of Through Traffic Lanes[2]	3-4	2-4
Minimum Width of Traffic Lanes (Excluding curb & gutter)	12′	12′
Curb and Gutter[10]	Type A	Type A
Number of Parking Lanes	0-2	-0-
Width of Parking Lanes	8′	-0-
Width of Median	-0-	-0-
Minimum Right-of-Way Width[5]	100′	80′
Minimum Design Speed MPH[8]	40	35
Minimum Stopping Sight Distance	275′-325′	225′-250′
Minimum K Crest Vertical Curve[3]	60-80	40-50
Minimum K Sag Vertical Curve[3]	60-70 (35 w/lighting)	50 (27 w/lighting)
Minimum Radii Horizontal Curves[9]	700′	500′
Minimum Horizontal Sight distance		
Sidewalks	2	2 Commercial 1 Industrial
Maximum Grade[6]	6%	6%
Minimum Grade[7]	0.8%	0.8%
Curb Return Radius	35′-50′	30′ Comm. 50′ Industrial
Minimum Distance from Intersection of R/W to Driveway Curb-cut	200′	150′
Intersection Sight Distance	(See Article 5203.9)	

	Residential[4] Collector	Residential[4] Local	Residential[4] Access
Number of Through Traffic Lanes[2]	2-3	2	2
Minimum Width of Traffic Lanes (Excluding curb & gutter)	12′	12′	12′
Curb and Gutter[10]	Type A	Type A	Type A
Number of Parking Lanes	0-2	0-2	0-1
Width of Parking Lanes	8′	8′	8′
Minimum Right-of-Way Width[5]	80′	80′	80′
Minimum Design Speed MPH[1]	30	25	20
Minimum Stopping Sight Distance	200′	150′	125′
Minimum K Crest Vertical curve[1],[3]	30	20	10
Minimum K Sag Vertical Curve[1],[3]	40 (20 w/lighting)	30 (14 w/lighting)	20 (9 w/lighting)
Minimum Radii Horizontal Curves[1],[9]	300′	185	100′
Minimum Horizontal Sight Distance	(Per AASHTO requirements)		
Sidewalks (5′ wide)	2	1-2	0-1
Maximum Grade[6]	8%	10%	12%
Maximum Grade at Intersection w/Stop	3% (within 75′)	5% (within 50′)	5% (within 25′)
Minimum Grade[7]	0.8%	0.8%	0.8%
Curb Return Radius	30′ Minimum	25′ Minimum	25′ Minimum
Minimum Spacing of Similar Roadways	1/4 mile	200′	175′
Minimum Distance from Intersection of R/W to Driveway Curb-cut	100′	25′	25′
Intersection Sight Distance	(See Article 5203.9)		

NOTES:

1. At end of cul-de-sac, minimum design speed = 10 mph, with corresponding minimum horizontal radius = 25′, minimum stopping sight distance = 75′; minimum K Crest = 3, and minimum K Sag = 5 (2 w/lighting).

2. All street design is subject to local governing agency approval.

3. K values for crest and sag vertical curves may be determined using the chart on Figure 1 or 2, or in accordance with AASHTO - A Policy on Geometric Design of Highways and Streets. Figure III-41 and III-43. The upper range K value shown on page 52-3 shall be used unless otherwise approved by the local governing agency.

4. See Figure 4 for typical residential street layout.

5. Consideration should be given to providing a 15′ minimum wide utility easement along each side of the right-of-way for residential access streets and 10′ wide utility easements for all other streets.

6. Absolute maximum grade = 10% for residential collectors, 12% for residential local streets, and 15% for residential access streets.

7. Absolute minimum grade = 0.5% and should only be used for relatively short distances.

8. 30 mph design speed with corresponding horizontal and vertical curve design criteria may be used for industrial commercial collector streets under special conditions when approved by the City Engineer.

9. The minimum radii shown is based on the AASHTO design for low-speed urban streets with no superelevation except for major arterials. The minimum radii for major arterials is based on 2% superelevation.

10. Curb and gutter required for all streets in urban density areas; optional for rural density areas.

5203.2 **Maximum and Minimum Gradient:** The maximum and minimum gradient for streets as noted in Section 5203.1 may be exceeded only upon written approval of the local governing agency.

5203.3 **Shoulder Gradients:** The finished grade within the limits of the right-of-way shall slope from one-quarter (1/4) inch vertical to one (1) foot horizontal minimum, to one-half (1/2) inch vertical to one (1) foot horizontal maximum measured above the back of the curb. The grading gradients may be varied only upon written approval of the local governing agency. Back slopes beyond the R/W line shall be 3.1 maximum, 4:1 desirable.

5203.4 **Tangent Length:** No tangent length shall be required between reverse curves for residential access and local streets. The minimum tangent length between reverse curves shall be 100 feet for collector/industrial streets. Major and minor arterial streets shall comply with current AASHTO guidelines.

5203.5 **Off-Center Street Intersections:** Off-center street intersections shall be separated as shown on Figure 3.

5203.6 **Intersection Angle:** It is desirable for all intersections to meet at approximately a 90° angle. Skewed intersections should be avoided and in no case should the angle be less than 75°.

5203.7 **Intersecting Minor/Major Arterial Streets:** Where any minor or major arterial streets intersect each other, the crowns of both streets shall be uniformly transitioned into a plane at the intersection unless otherwise approved. Changes from one cross slope to another should be gradual.

5203.8 **Curb Radii:** When two streets of different classification intersect, the higher classification street shall govern the curb radii dimension listed in 5203.1. Equivalent three-center compound curves may be used in lieu of a single radius curve. Curb ends facing the flow of traffic shall have a five-foot taper from full height to zero.

5203.9 **Sight Distance at Intersecting Streets:** Sight distance triangles at intersecting side streets shall be in accordance with the current edition of A Policy on Geometric Design of Highways and Streets, AASHTO. Every effort shall be made to select intersection locations so that the maximum sight distance is possible. All intersections shall have a minimum sight triangle from a point 20 feet back along the curb line of the abutting street, to a point 140 feet along the curb line of the street. The sight triangle area shall be and remain free of visual obstructions higher than two feet above the roadway surface. Within the central business district, the sight distance triangle shall conform as closely as possible to the requirements for sight distance as approved by the City Engineer.

5203.10 **Considerations For Connection to Existing and Future Streets:** Consideration shall be given to the horizontal and vertical alignment of roadways where they connect to existing streets or where roadways may be extended in the future. Where a new street is to connect to an existing street, all deteriorated or cracked asphalt within five feet of the connection point shall be removed to a point where sound material is found. Existing pavement is to be saw cut for the entire width of the street to a minimum depth of six inches. If full-depth pavement removal is required, the subgrade shall be re-compacted to 95% of standard density.

5203.11 **Pavement Section:** Pavement shall be constructed upon compacted subgrade and of materials and the minimum thickness as shown on the standard drawings for the applicable street classification.

5203.12 **Pavement Transition:** Reduction in pavement width in the direction of traffic flow shall be accomplished by a taper. The minimum desirable length for merging taper shall be determined by the formula $L=WS^2/60$ where posted speeds are 40 mph or less. The formula $L=WxS$ should be used for roadways having a posted speed limit of 45 mph or greater. Under either formula, L= taper length in feet, W = width of the closed lane in feet, and S = design speed.

5203.13 **Cul-De-Sacs:** At locations where streets are to be terminated and a vehicular connection between adjacent streets is not required, a cul-de-sac may be permitted. Such cul-de-sac shall be constructed

with a minimum radius of 39 feet to the back of the curb if there are no islands located in the cul-de-sac.

5203.14 **Temporary Turn-Arounds:** At locations where streets will be temporarily terminated and which will be extended at a later date, and said street extends beyond the intersection of an adjacent street more than 150 feet, a temporary cul-de-sac shall be constructed with a minimum radius of thirty-five (35) feet. The temporary cul-de-sac shall be constructed of asphaltic concrete with a minimum depth of eight inches. Curb and gutter will not be required. The cul-de-sac shall be constructed within the limits of a permanent easement.

5203.15 **Driveway Grades:** Driveway grades shall conform to the typical section of the street within the right of way. Any deviations shall be approved by the local government official with the following limitations: Driveways shall attain a minimum elevation of six inches above the gutter elevation within the right of way with a maximum grade of 8%. The algebraic difference in grades at the right-of-way on crest drives shall be 8% maximum and on sag drives shall be 12% maximum. Desirable maximum driveway grade outside the right-of-way shall be 15%.

5203.16 **Access for the Disabled:** Ramps shall be required at all planned sidewalk-curb intersections in accordance with standard practice and approved by the local governing agency. Non-standard driveways and alleys will also be designed to accommmodate the handicapped.

5203.17 **Street Lighting:** All street lighting shall be designed in accordance with design criteria approved by the local governing agency.

5203.18 **Storm Drainage:** All storm drainage shall be designed in accordance with Section V of this manual unless otherwise directed or approved by the local governing agency.

5203.19 **Underdrains:** In areas that have known subsurface moisture problems, underdrains or drainage blankets shall be designed.

5203.20 **Erosion Control Within R/W Limits:** As a minimum, all grass areas in the R/W shall be seeded and mulched to control erosion on to the roadway. All construction projects that have exposed grading require temporary erosion control measures. Temporary erosion control must be approved by the City Engineer.

5203.21 **Survey Monument Boxes:** Monument boxes conforming to Figure 5 shall be installed at all quarter section corners involved in the street construction. The monument boxes shall be set by a Registered Land Surveyor licensed in the state the monumentation work is performed.

5203.22 **Traffic Impact Studies:** At the developer's expense, traffic impact studies are required where developments have adverse impact on existing traffic conditions.

5203.23 **Obstructions:** Rigid structures such as poles and hydrants shall be placed a minimum horizontal distance of 1.5 feet from the face of curb to edge of obstruction. When required, guardrail and barricades shall be installed in accordance with the AASHTO Roadside Design Guide or local policies. Vertical clearance of a minimum 14.5 feet shall be provided. Along sidewalks, a minimum vertical clearance of seven feet shall be provided.

5203.24 **Other Design Criteria:** Design criteria not covered by this document shall be in accordance with the most current edition of A Policy on Geometric Design of Highways and Streets by the American Association of State Highway and Transportation Officials (AASHTO) or other applicable AASHTO design guides.

5203.25 **Landscaping:** See standard drawings for location and spacing of trees. Spacing depends on species selected. Tree species shall be approved by the Planning Commission. Trunk size of new trees shall be one and three fourths (1 3/4) inch to two (2) inch diameter.

SECTION 5204 GENERAL PLAN REQUIREMENTS:

5204.1 **Scope:** This section governs the preparation of plans for street projects.

5204.2 **General:** The plans shall include all information necessary to build and check the design of streets and related appurtenances. The plans shall be arranged as required by the City Engineer of local governing agency. Plans shall be sealed by a Registered Professional Engineer in the state of the city or governing agency and shall be submitted to the local governing agency for review and approval.

5204.3 **Scales:** Plans shall be drawn at the following minimum scales. Larger scales may be needed to clearly present the design. Bar scales shall be shown on each sheet for each scale.

Plan: 1-inch = 50 feet Suburban
1-inch = 20 feet Urban

Profile:
Vertical: 1-inch = 10 feet Suburban
1-inch = 5 feet Urban
Horizontal: 1-inch = 50 feet Suburban
1-inch = 20 feet Urban

Drainage Area Map:
On site: 1-inch = 200 feet
Off site: 1-inch = 1,000 feet

Structural Plans: 1-inch = 1 foot

Graphic Drawings: Varies

5204.4 **Sheet Sizes:** The suggested plan sheet size is 22" x 36", 22" x 34", or 24" x 36" with all sheets in a given set of plans being of the same size. Plan and profile shall be drawn on double or single plan and profile sheets to minimum scales shown above.

5204.5 **Types of Sheets in Plans:** The plans shall consist of:

1. Title sheet
2. General layout sheets
3. Plan and profile sheets
4. Cross-section sheets
5. Drainage area map
6. Standard and special detail sheets
7. Lighting plans (if required)
8. Traffic control plans (if required)
9. Temporary erosion control plans (if required)

Each sheet should contain a sheet number, including the individual sheet number and the total number of sheets, proper project identification and date. Where feasible, storm sewer construction details should be incorporated into the street plans. The engineer's seal shall appear on the title sheet.

5204.6 **Required Information for Title Sheet:**

1. Name of project.

2. Project number (where applicable).

3. Index of sheets included in plans.

4. A location map adequately showing project location in relation to major streets, with north arrow and scale.

5. Signature block for local governing agency approval.

6. The project control bench marks shall be identified as to location and elevation; NGVD datum or as required by the local governing agency. A minimum of two (2) bench marks are required for any project.

7. Name, address and telephone number of the consulting engineer and owner/developer as well as signature block for the owner/developer.

8. List containing name and telephone number of each utility company and the State One-Call System.

9. A legend of symbols shall be shown that shall apply to all sheets.

10. Design speed plus other traffic information as required by the local governing agency.

11. Engineer's seal, signed and dated.

5204.7 **Required Information for General Layout Sheet:**

1. General Notes: Minor construction notes shall appear on the proper plan and profile sheet.

2. North arrow and bar scale. Scale of the general layout map shall be one (1) inch equals one hundred (100) feet.

3. Layout shall include name of subdivision, block designation if any, lot designation or proposed block and lots, all street names, street alignment with back of curb lines, and an accurate tie to at least one quarter section corner. An unplatted tract shall have an accurate tie to at least two (2) quarter section corners.

4. Boundary line of project area.

5. Schematic layout of all proposed sidewalks and utility improvements including storm drainage, sanitary sewers, water lines, street lights, traffic signals, etc., shall be shown.

6. A list of materials and quantities if not provided on a separate sheet.

7. Typical street sections and curb and gutter details.

5204.8 **Required Information for Plan and Profile Sheets:**

1. North arrows and bar scale.

2. Elevation and location of all applicable benchmarks; NGVD datum or as required by the local governing agency.

3. Existing and proposed streets with names and pavement widths.

4. Property lines properly identified as to existing or proposed lot, block and subdivision.

5. All existing and proposed utilities such as power, gas, oil, water, telephone, sewer, and other items shall be properly located in conformance with the best information available in the records of the owner of such facilities, or field location, and identified as to size and material.

6. All existing and known proposed improvements within 50 feet each side of right-of-way and 200 feet beyond the project limits shall be shown at their proper locations unless otherwise approved or required by the local governing agency. This shall include such existing items as paved streets, curb and gutters, driveways, culverts, fire hydrants, utility poles, trees, shrubs, fences, walls, houses, and other such items, and shall be identified as to type, size, material, etc. as may be applicable.

7. All existing and proposed easements and right-of-way information.

8. Locations and widths of existing and proposed sidewalks.

9. Horizontal curve data and vertical curve data (K value, stopping sight distance, and middle ordinate).

10. Center line stations shall be marked at 100-foot intervals and at other pertinent points.

11. Top of curb elevations shall be shown at maximum increments of 15′ along the curb returns at street intersections.

12. Profile shall show existing grade as a dashed line, proposed finish grades or established street grades by solid lines.

13. Storm sewer criteria shall be in accordance with Section V.

14. Elevations shall be shown at a minimum interval of 50 feet for tangents and 25 feet for curves.

15. Approximate grading limits.

16. Location of test borings if taken.

5204.9 **Required Information for Cross-Section Sheets:**

1. Street cross section at each station showing existing grade by dashed lines and proposed grade by a solid line. Cross sections to show existing grade lines a minimum of ten (10) feet beyond right-of-way lines or grading limit, whichever is further. The center line and location right-of-way shall be shown.

2. Center line elevation of top of pavement.

3. Center line cross sections shall be shown at all intersecting streets and driveways.

4. Additional cross sections shall be shown as required to clearly describe the extent of the grading operations.

5. In lieu of cross sections for residential development, three or five line profiles may be used if approved by the local governing agency. The three line profiles shall consist of a profile of the existing ground at each right-of-way line and existing and finished profile at the center line of the street. The other two profiles shall show the final grade at the building setback line. A grading plan may be required for residential development.

5204.10 **Required Information for Standard and Special Detail Sheets:** Detail sheets shall be included to show all details of appurtenances, materials, and construction. Details shall conform to the requirements of the local governing agency and are to be drawn clearly and neatly with proper identifications, dimensions, materials and other information necessary to insure the desired construction.

5204.11 **Required Information for Lighting Plans:** Street lighting plans shall be prepared in accordance with design criteria approved by the local government agency, and included in addition to the street improvement plans for approval. The plan shall be at 1" = 50′ (minimum) scale with the streets and adjacent plats labeled.

5204.12 **Required Information for Traffic Control Plan Sheets:**

1. Limits of any road closures shall be shown along with the traffic control devices used to effect the closure. Length of time of road closure shall be indicated.

2. Detour plan shall be designed for traffic affected by road closures. Detour signing used to direct motorist over the detour route shall be included in the detour plan.

3. Typical lane closure or lane shift plans including taper lengths and spacing of all channelizer devices. Types and spacing of all construction signs shall be shown.

4. All traffic control shall be designed using the traffic control devices and application principles contained in the MUTCD.

5204.13 **Required Information for Temporary Erosion Control Plan Sheets:**

1. Each temporary erosion control feature designation shall be shown at its proper location on the plans.

2. Temporary erosion control devices details as required, such as standard temporary beams, temporary slope drains, types of ditch checks, and sediment basins.

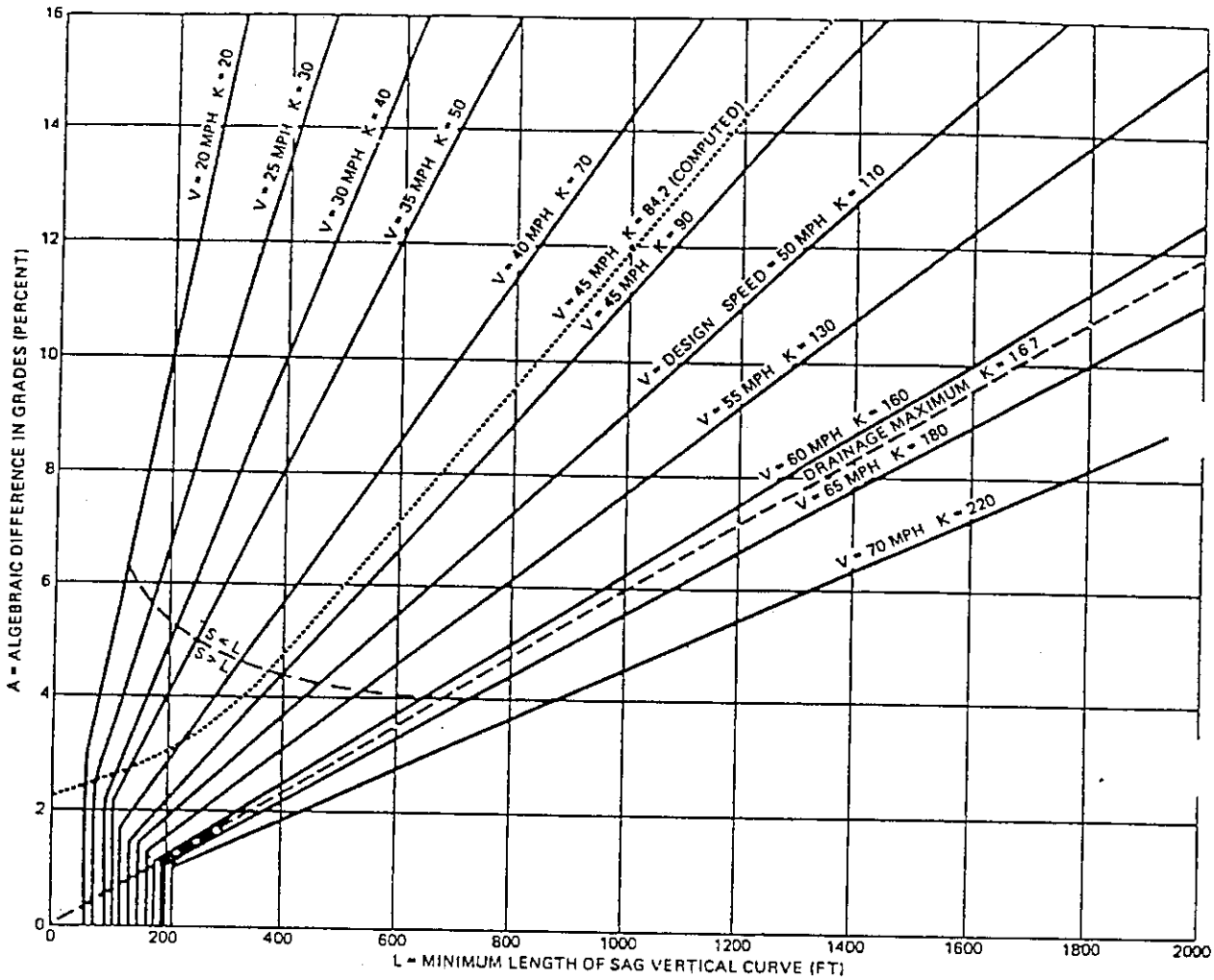

DESIGN CONTROLS FOR SAG VERTICAL CURVES
OPEN ROAD CONDITIONS
UPPER RANGE

Source: 1990 AASHTO
A Policy on Geometric Design of Highways and Streets

FIGURE 1

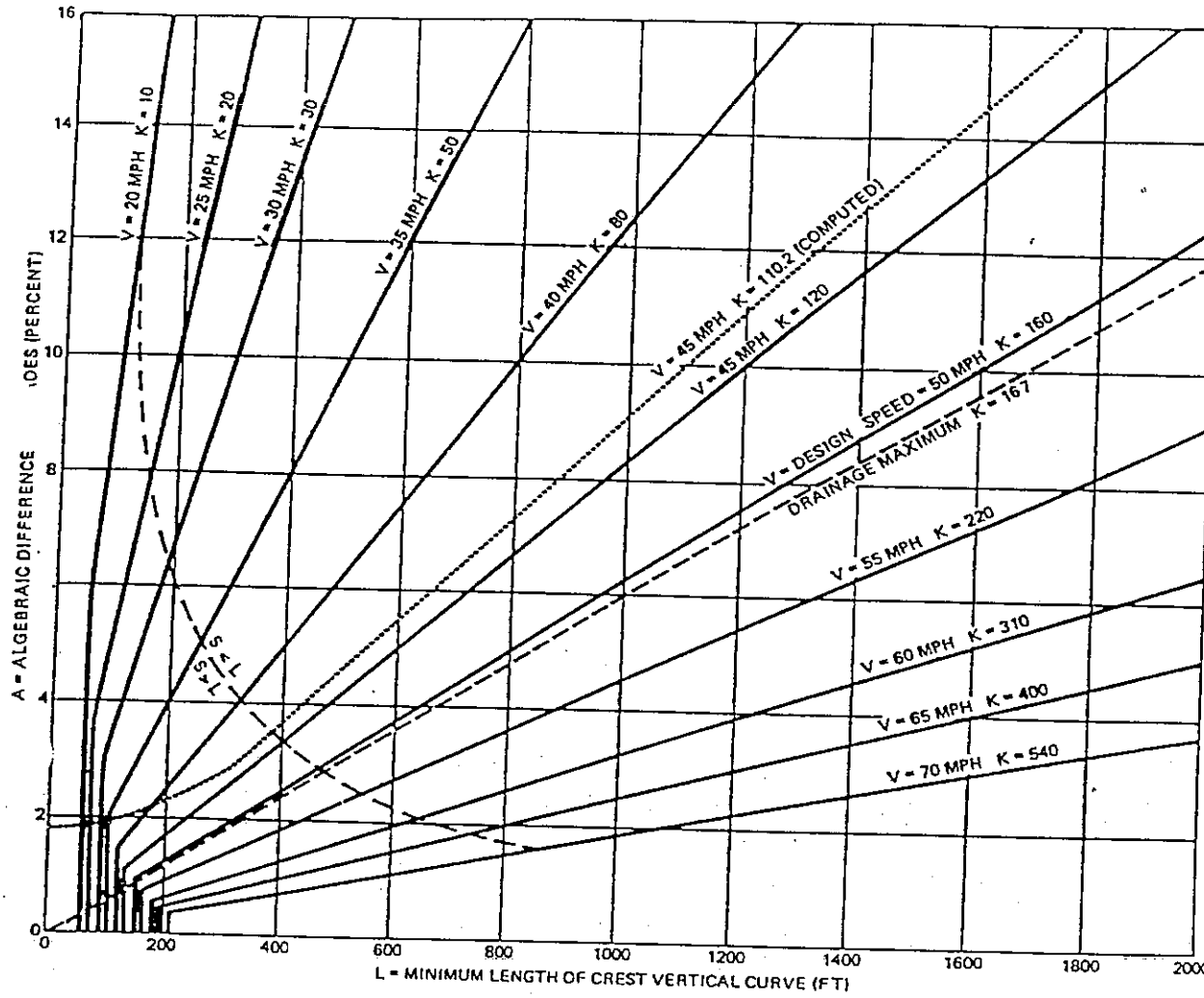

DESIGN CONTROLS FOR CREST VERTICAL CURVES FOR STOPPING SIGHT DISTANCE AND OPEN ROAD CONDITIONS UPPER RANGE

Source: 1990 AASHTO
A Policy on Geometric Design of Highways and Streets

FIGURE 2

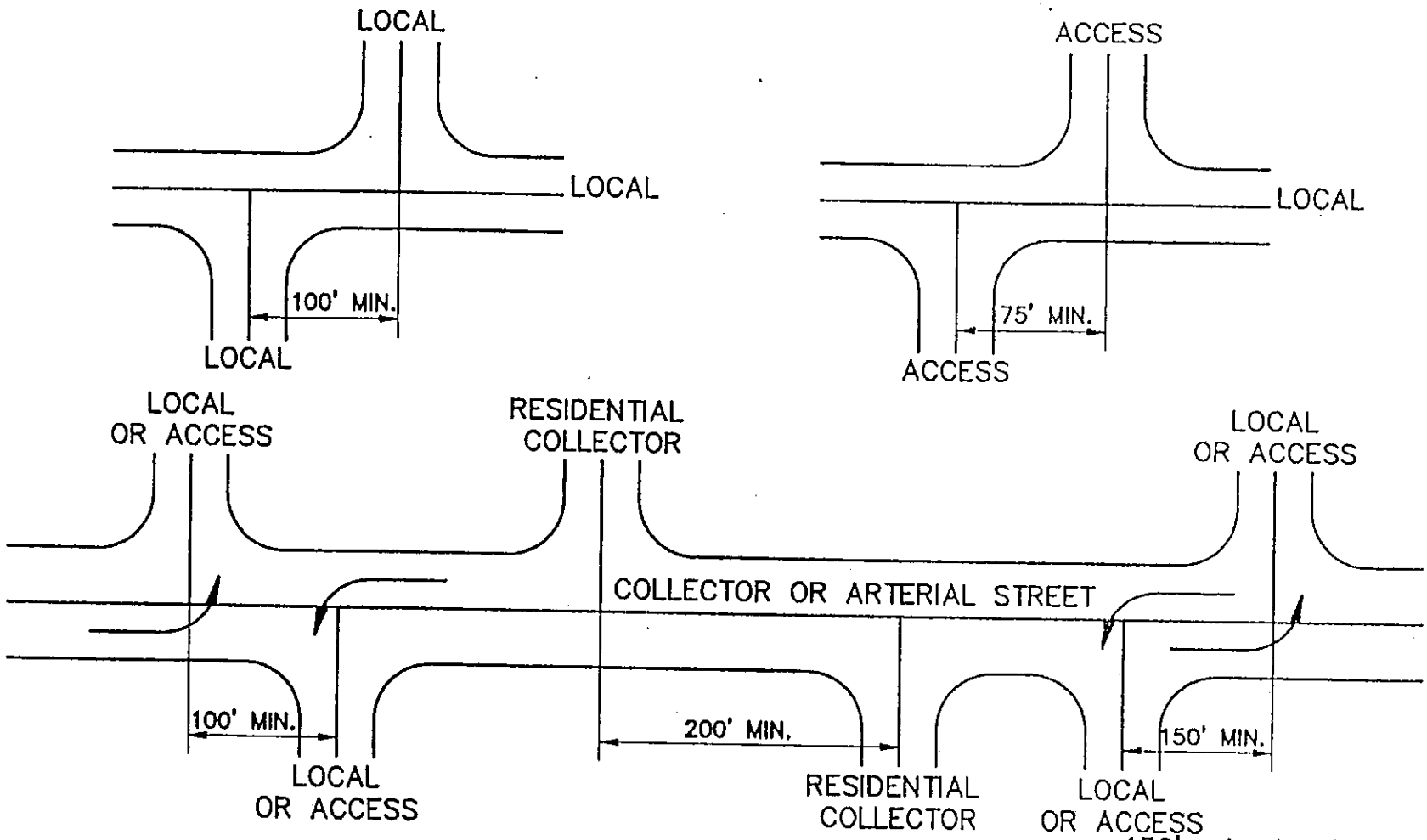

100' min. local street separation with no turning conflicts.

MINIMUM INTERSECTION SPACING

150' min. local street separation with turning conflicts.

AMERICAN PUBLIC WORKS ASSOCIATION

OFF-CENTER STREET INTERSECTIONS

FIGURE 3

ADOPTED:

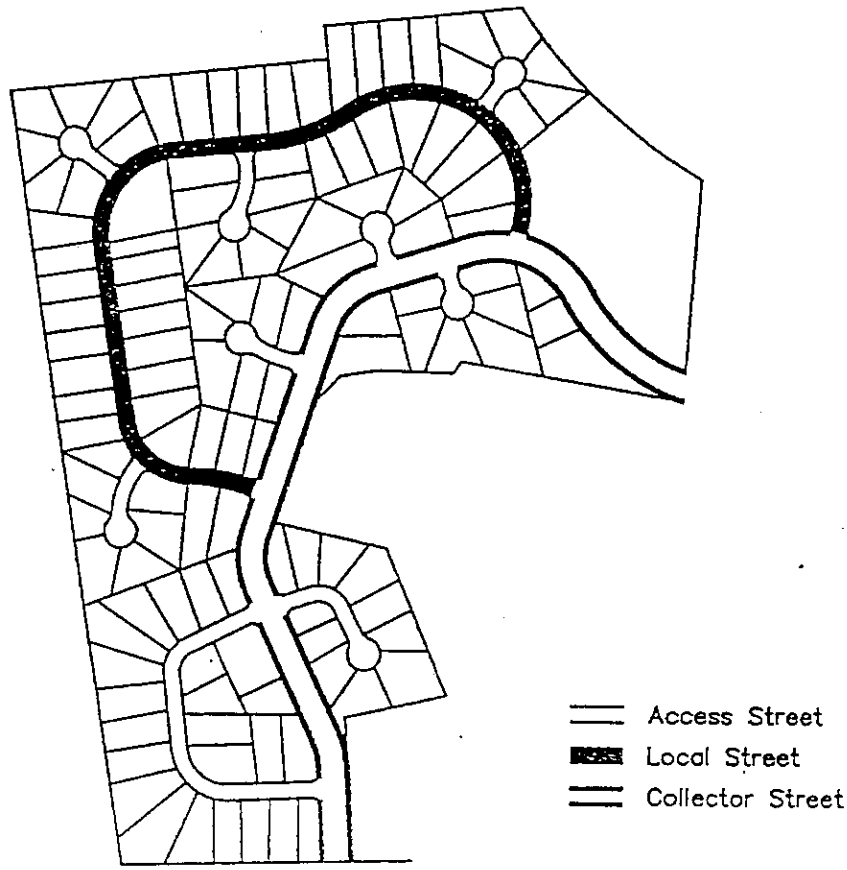

ARTERIAL STREET

TYPICAL RESIDENTIAL STREET LAYOUT

AMERICAN PUBLIC WORKS ASSOCIATION	
TYPICAL RESIDENTIAL STREET LAYOUT	FIGURE 4 ADOPTED:

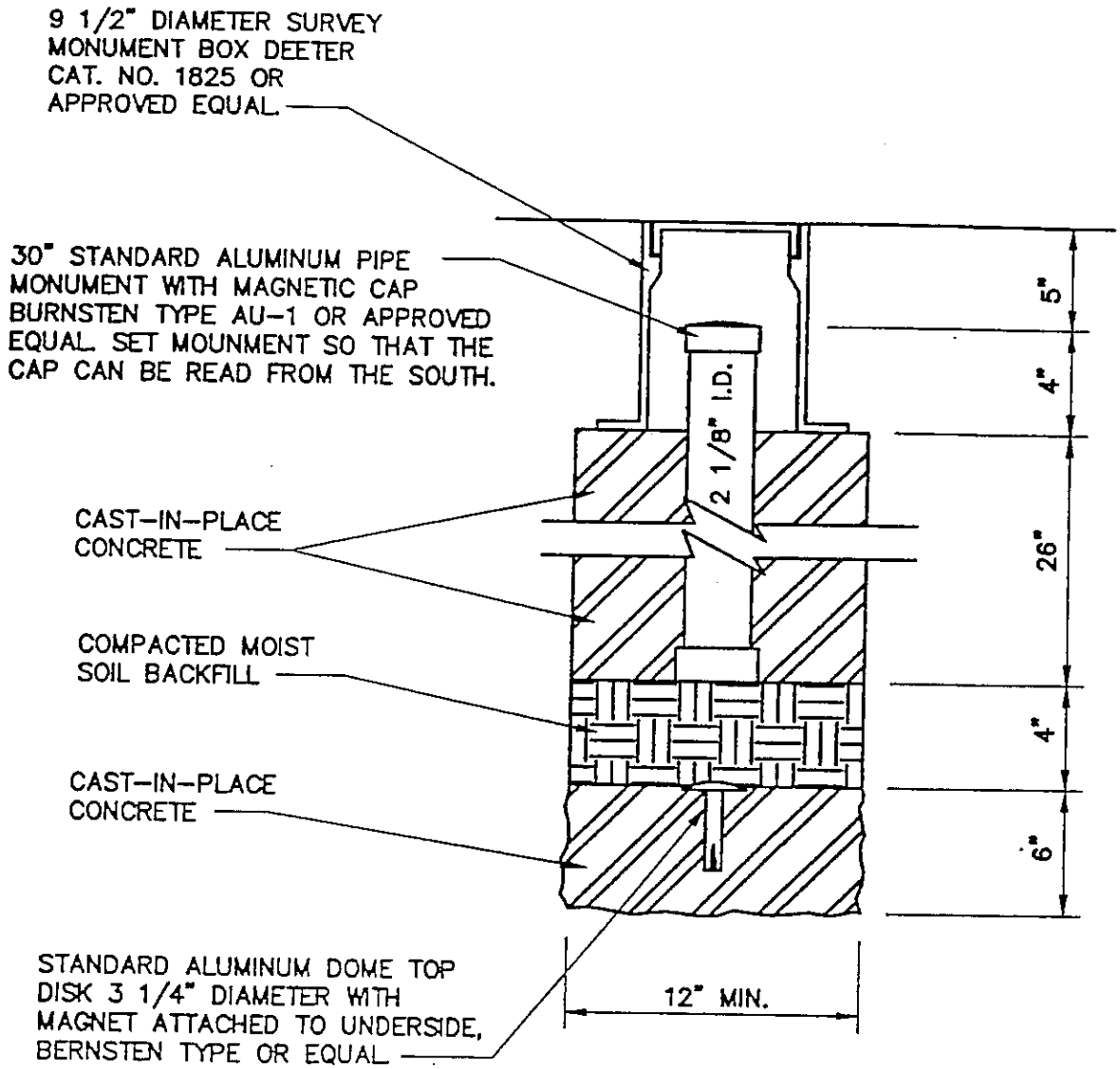

STANDARD LAND CORNER MONUMENT
(NO SCALE)

NOTE:
DISK MARKING FOR SECTION CORNERS SHALL COMPLY WITH

KANSAS SOCIETY OF LAND SURVEYOR STANDARDS OF PRACTICE #1 FOR MONUMENTS IN KANSAS.

AMERICAN PUBLIC WORKS ASSOCIATION	
SURVEY MONUMENT BOX	FIGURE 5 ADOPTED:

Street Classification	Pavement Types		
	Option 1 (urban density)	Option 2 (urban density)	Option 3 (rural density)
Arterial and Industrial Collector	8" min. portland cement concrete pavement 6" min. compacted subgrade 95% of standard max. density	2" Type BM-2 asphaltic concrete surface 9" min. Type-BM-2B asphaltic concrete base course 6" min. compacted subgrade 95% of standard max. density	Option 1 or Option 2
Commercial Collector	7" min. portland cement concrete pavement 6" min. compacted subgrade 95% of standard max. density	2" Type BM-2 asphaltic concrete surface 7" min. Type-BM-2B asphaltic concrete base course 6" min. compacted subgrade 95% of standard max. density	Option 1 or Option 2
Residential Collector	6" min. portland cement concrete pavement 6" min. compacted subgrade 95% of standard max. density	2" Type BM-2 asphaltic concrete surface 6" min. Type-BM-2B asphaltic concrete base course 6" min. compacted subgrade 95% of standard max. density	Double chip and seal surface 10" min. AB-3 aggregate base (compacted) 6" min. compacted subgrade 95% of standard max density
Residential Access/ Residential Collector	6" min. portland cement concrete pavement 6" min. compacted subgrade 95% of standard max. density	2" Type BM-2 asphaltic concrete surface 6" min. Type-BM-2B asphaltic concrete base course 6" min. compacted subgrade 95% of standard max. density	Double chip and seal surface 8" min AB-3 aggregate base compacted 6" min. compacted subgrade 95% of standard max density

General Notes:

1. The pavement thicknesses shown are minimums and the actual pavement design should be determined by an engineering analysis of traffic and local subgrade conditions.
2. Other pavement type options to be considered shall be submitted to the Department of Public Works for approval.
3. Concrete pavement joint detail shall be submitted to the Department of Public Works.
4. Refer to the City of Baldwin City, Kansas Subdivision Regulations for definition of urban density and rural density.

Table 1

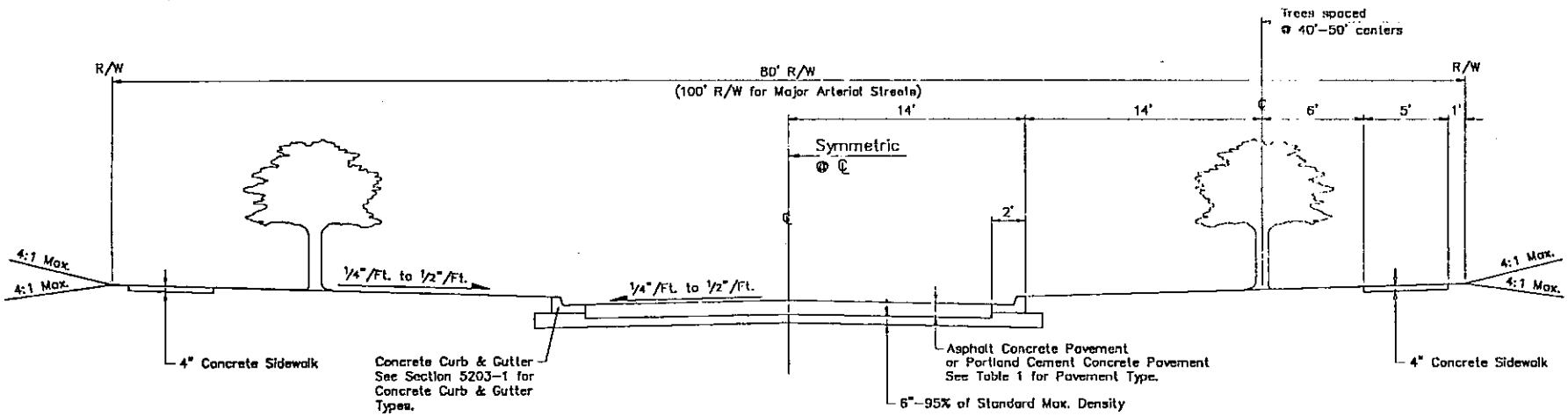

URBAN–DENSITY TYPICAL SECTION

1. Refer to Baldwin City Subdivision Regulations for definition of urban density.
2. See Section 5203.25, Landscaping for tree species and sizes.

BALDWIN CITY, KANSAS	
URBAN–DENSITY TYP. SECTION	
DATE: 4–7–94	SH. OF
DRAWN:	APPVD: RAW

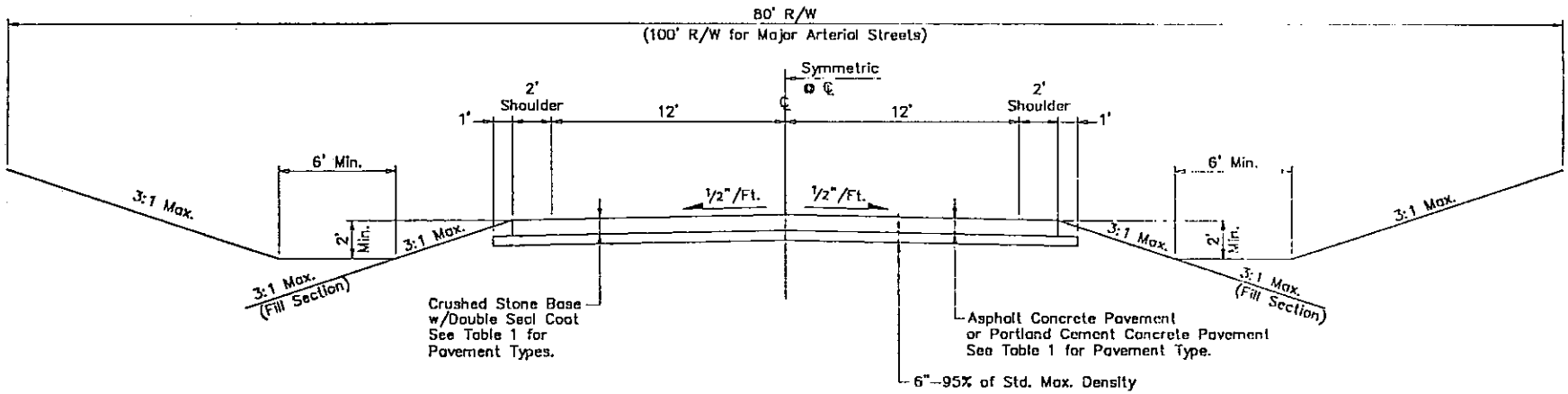

RURAL-DENSITY TYPICAL SECTION

Refer to Baldwin City Subdivision Regulations for definitions of rural density.

BALDWIN CITY, KANSAS	
RURAL-DENSITY TYP. SECTION	
DATE: 4-7-94	SH. OF
DRAWN:	APPVD: RAW

Notes:

1. 1/2" premolded expansion joints shall be placed at points of curvature, curb returns, curb inlets, and at 250' centers. Contraction joints shall be 2" deep, and placed at 15' intervals equally spaced between expansion joints. Kansas class A (AE) concrete shall be used throughout unless otherwise noted.
2. All crushed stone used as aggregate for concrete construction shall be obtained from quarries and beds designated by the Kansas Department of Transportation as meeting durability requirements of Class 1 or Class 6.
3. Steel reinforcement may be omitted from Type A & B curb placed on a minimum of 4" of base asphalt.
4. Add #4 dowels (3'-0" long) at 2'-6" centers and keyed longitudinal joint when constructing concrete pavement.

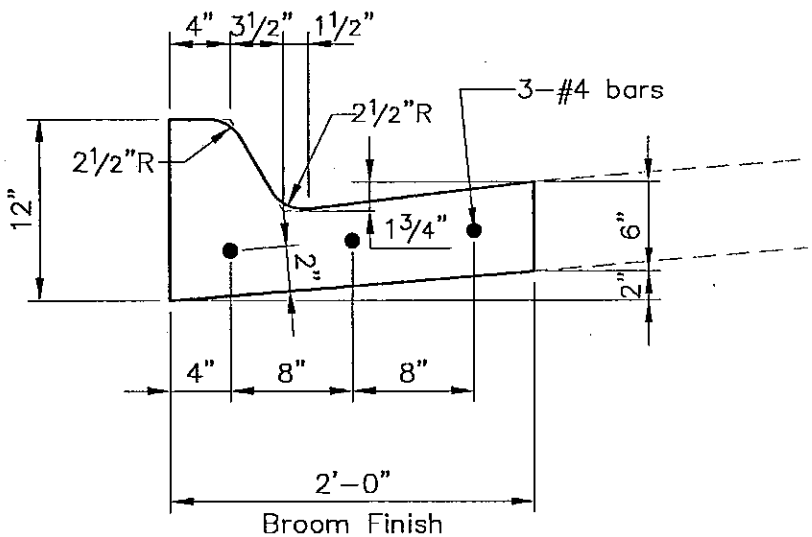

TYPE "A" CURB

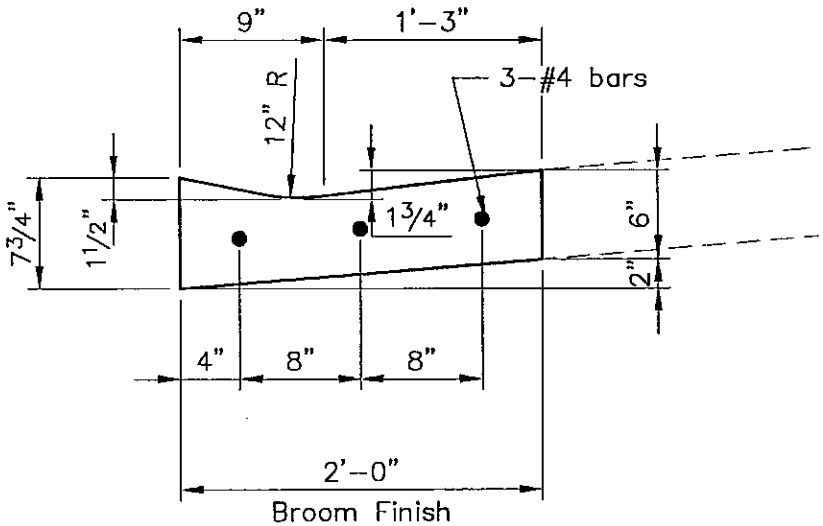

TYPE "B" CURB

(Residential and Commercial Entrances only)

CONCRETE CURB & GUTTER

BALDWIN CITY, KANSAS	
CONCRETE CURB & GUTTER	
DATE: 4-18-94	SH. OF
DRAWN:	APPVD: RAW

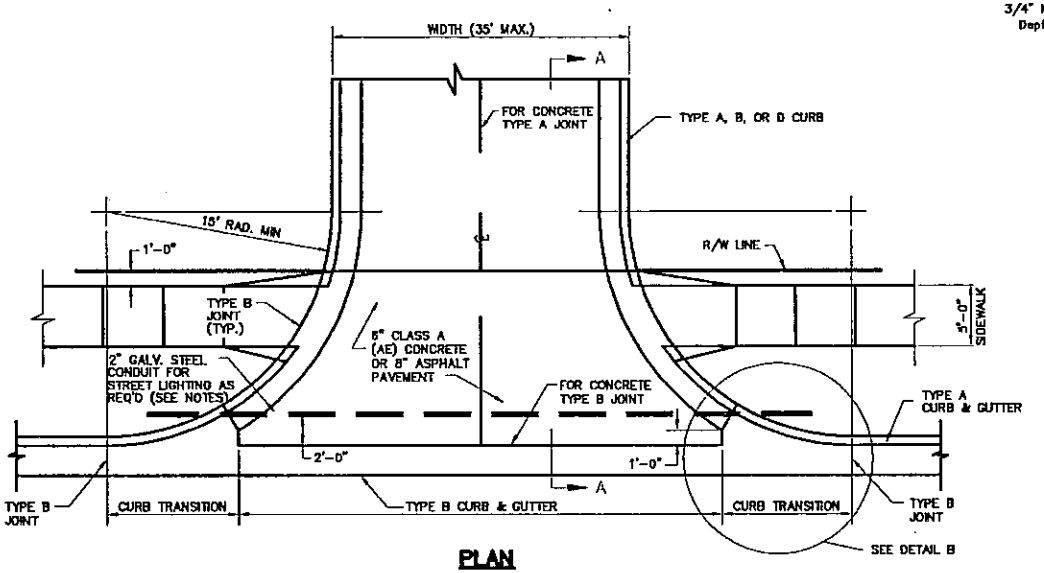

PLAN

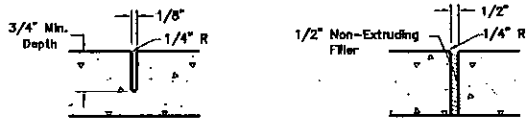

TYPE A **TYPE B**

JOINT DETAILS

NOTES

1. ALL CRUSHED STONE USED AS AGGREGATE FOR CONCRETE CONSTRUCTION SHALL BE OBTAINED FROM QUARRIES AND BEDS DESIGNATED BY THE KANSAS DEPARTMENT OF TRANSPORTION AS MEETING DURABILITY REQUIREMENTS OF CLASS 1 OR CLASS 6.
2. USE KANSAS CLASS A CONCRETE (AE) THROUGHOUT.
3. CONCRETE PAVEMENT SHALL BE JOINTED WITH TYPE A JOINTS. NO JOINTED SLAB SHALL EXCEED 12'X12'.
4. CONDUIT IS REQUIRED UNDER ALL PAVED SURFACES FOR STREET LIGHT CABLE CROSSING. EXISTING DIRECT BURIED CABLE SHALL BE CUT AND NEW CABLE INSTALLED IN THE NEW CONDUIT PLACED UNDER PLACED UNDER THE PAVED SURFACE. JUNCTION BOXES AND OTHER APPURTENANCES SHALL BE INCLUDED IN THE WORK AS DIRECTED BY THE CITY REPRESENTATIVE.
5. AN ALUMINUM MARKER SHALL BE INSTALLED ON BOTH SIDES OF A COMMERCIAL ENTRANCE TO LOCATE ELECTRICAL CONDUIT. SEE CONDUIT MARKING DETAIL.

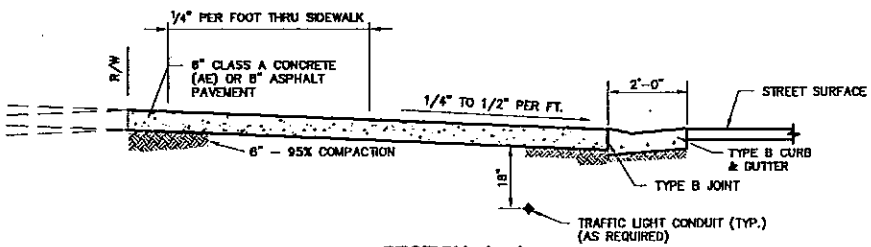

SECTION A-A

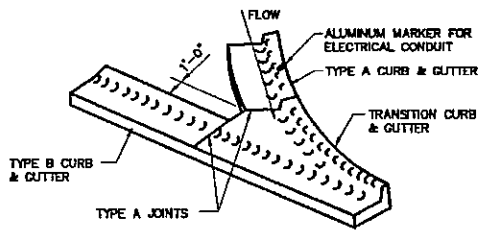

DETAIL B

COMMERCIAL ENTRANCE

BALDWIN CITY, KANSAS	
COMMERCIAL ENTRANCE	
DATE: 4-18-94	SH. OF
DRAWN:	APPVD: RAW

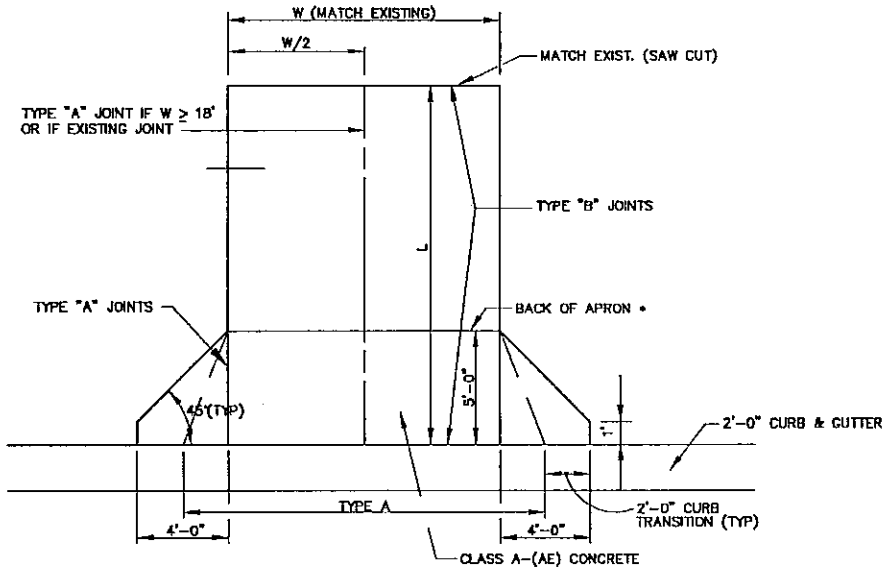

TYPICAL DRIVEWAY DETAILS

• ALL DRIVES TO BE REPLACED TO 5' BACK OF CURB UNLESS OTHERWISE NOTED.

NOTES:

1. DRIVEWAYS ARE TO BE 6" NON-REINFORCED CONCRETE.
2. KDOT CLASS A (AE) CONCRETE SHALL BE USED IN ALL CURBS, PAVEMENT, SIDEWALKS AND DRIVEWAYS, WITH THE NORMAL SLUMP ADJUSTED DOWNWARD TO 2" FOR CURBS & STRUCTURES.
3. ALL JOINTS SHALL BE AT RIGHT ANGLES TO THE ALIGNMENT OF THE CURBING UNLESS OTHERWISE NOTED.
4. 1/2" PREMOULDED EXPANSION JOINTS SHALL BE PLACED AT POINTS OF CURVATURE, CURB RETURNS, CURB INLETS AND AT INTERVALS NOT TO EXCEED 250 FEET.
5. THE CONCRETE SURFACES OF CURB AND GUTTER, SIDEWALK AND DRIVEWAYS SHALL BE FINISHED WITH A WOODEN OR STEEL FLOAT AND BROOMED. ALL DRIVE AND SIDEWALK SURFACES SHALL BE FINISHED WITH A SMOOTH EDGING TOOL.
6. ALL SAWCUTS SHALL BE SUBSIDIARY TO OTHER BID ITEMS.
7. ALL CRUSHED STONE USED AS AGGREGATE FOR CONCRETE IN THIS WORK SHALL BE OBTAINED FROM QUARRIES AND BEDS DESIGNATED BY KDOT AS MEETING DURABILITY REQUIREMENTS OF CLASS 1 OR CLASS 6.
8. ALL CONCRETE MATERIAL 6" AND DEEPER AND CONCRETE USED IN INLET STRUCTURES SHALL BE VIBRATED ACCORDINGLY.
9. WHERE ENTRANCE CROSSES EXISTING SIDEWALK, REMOVE EXISTING SIDEWALK FOR A LENGTH EQUAL TO THE NEW ENTRANCE WIDTH. CONSTRUCT 6" THICK ENTRANCE DRIVEWAY. USE TYPE B JOINT WHERE NEW ENTRANCE PAVEMENT ABUTS EXISTING SIDEWALK.

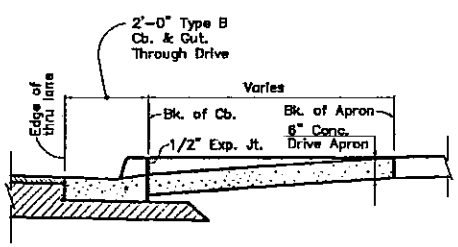

TYPICAL SECTION – APRON

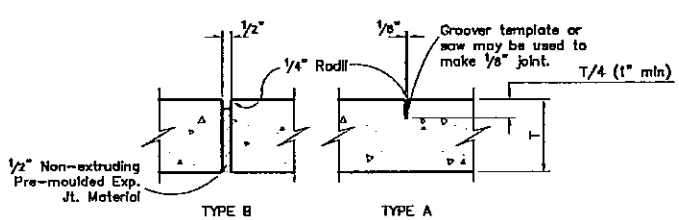

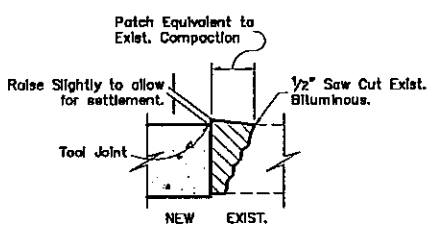

NEW CONC. TO EXIST. BITUMINOUS

CONCRETE JOINT DETAILS

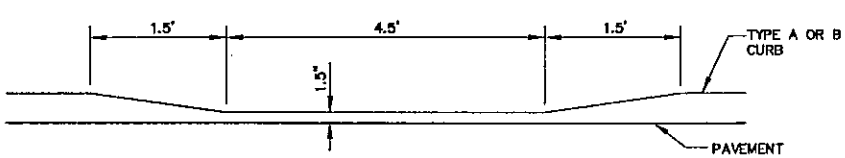

MAINTENANCE CURB DEPRESSION

BALDWIN CITY, KANSAS	
RESIDENTIAL DRIVES	
DATE: 4-18-94	SH. OF
DRAWN:	APPVD: RAW

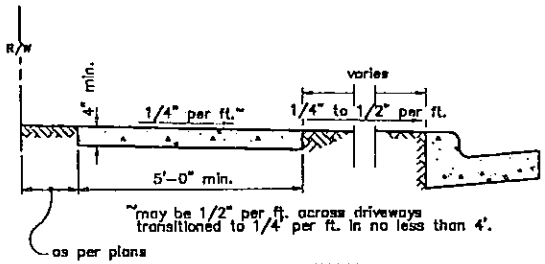

STANDARD SIDEWALK

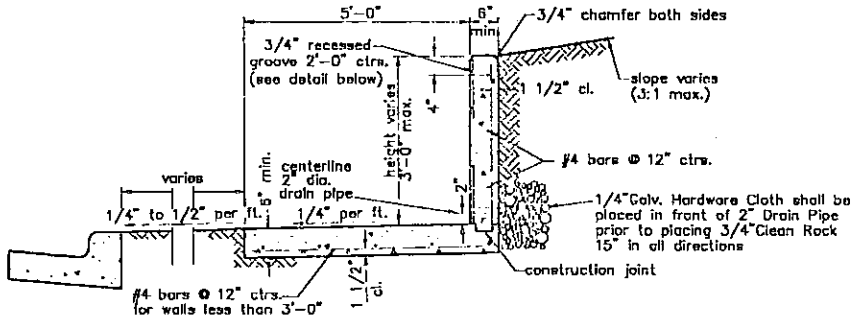

INTEGRAL SIDEWALK AND RETAINING WALL

NOTES:

1.* ALL VERTICAL FORM EXPANSION AND CONSTRUCTION JOINTS MUST FALL IN GROOVE.

2. JOINT SPACING 5'-0" CENTER TO CENTER OR WIDTH OF SIDEWALK.

3. A TYPE B JOINT IS TO BE PLACED WHERE WALK ABUTS JUNCTION OF EXISTING WALK, CONCRETE CURBS, DRIVEWAYS, AND SIMILAR STRUCTURES, AND 250' CENTERS MAXIMUM.

4. KEY ALL CONSTRUCTION JOINTS.

5. ALL SIDEWALK OFFSET TRANSITIONS TO BE 25'. FOR SIDEWALKS THAT ABUT THE CURB & GUTTER SEE DETAIL.

6. ALL SIDEWALK SURFACE TO HAVE TRANSVERSE LIGHT BROOM FINISH.

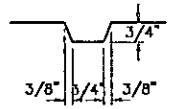

RECESSED GROOVE DETAIL*

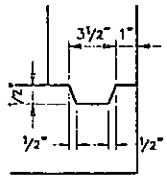

CONSTRUCTION JOINT DETAIL

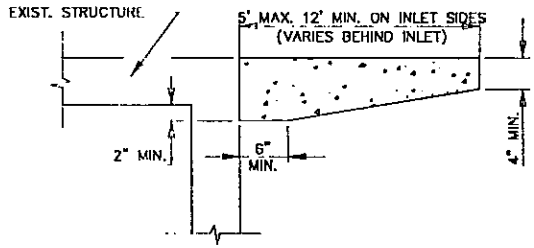

SIDEWALK ABUTTING CURB INLET DETAIL

NOTE: EXTRA LABOR & MATERIALS SUBSIDIARY TO 4" CONC. SIDEWALK. APPLY TO ALL THREE SIDES OF THE STRUCTURE.

SIDEWALK DETAILS

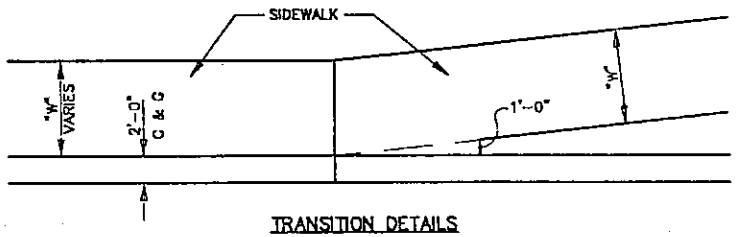

TRANSITION DETAILS

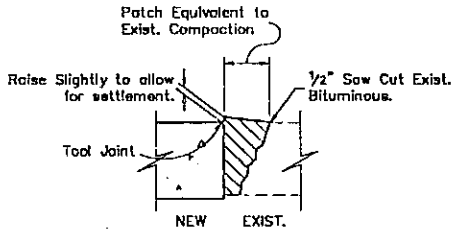

NEW CONC. TO EXIST. BITUMINOUS

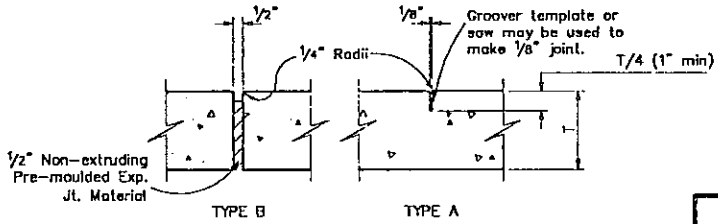

CONCRETE JOINT DETAILS

BALDWIN CITY, KANSAS	
SIDEWALK DETAILS	
DATE: 4-7-94	SH. OF
DRAWN:	APPVD: RAW

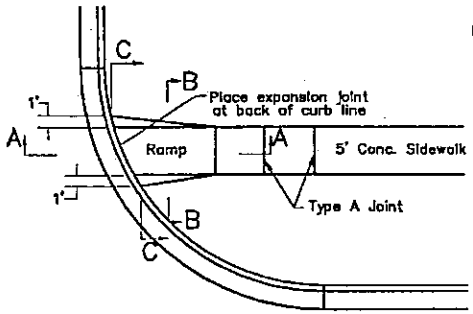

PLAN VIEW

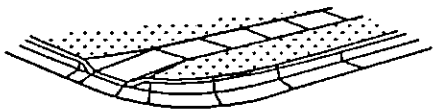

3-D VIEW

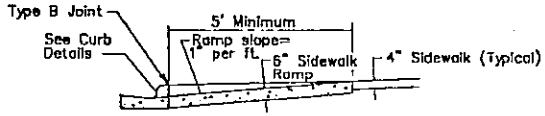

SEC. A-A

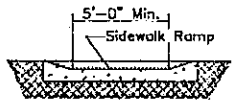

SEC. B-B

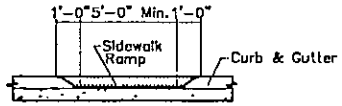

SEC. C-C

TYPE A SIDEWALK RAMP

NOTES:

DETAILS SHOWN ON THIS PLAN APPLY TO ALL CONSTRUCTION OR RECONSTRUCTION OF STREETS, CURBS OR SIDEWALKS.

CURB CUT RAMPS ARE TO BE LOCATED AS SHOWN ON THE PLANS OR AS DIRECTED BY THE ENGINEER.

RAMPS SHALL BE PROVIDED AT ALL CORNERS OF STREET INTERSECTIONS WHERE THERE IS EXISTING OR PROPOSED SIDEWALK AND CURB. RAMPS SHALL ALSO BE PROVIDED AT WALK LOCATIONS IN MID-BLOCK IN THE VICINTIES OF HOSPITALS, MEDICAL CENTERS AND ATHLETIC STADIUMS.

SURFACE TEXTURE OF THE RAMP SHALL BE THAT OBTAINED BY A COARSE BROOMING, TRANVERSE TO THE SLOPE OF THE RAMP.

SIDEWALKS SHALL BE RAMPED WHERE THE DRIVEWAY CURB IS EXTENDED ACROSS THE WALK.

CARE SHALL BE TAKEN TO ASSURE A UNIFORM GRADE ON THE RAMP, FREE OF SAGS AND SHORT GRADE CHANGES.

IF POSSIBLE, DRAINAGE STRUCTURES SHOULD NOT BE PLACED IN LINE WITH RAMPS. EXCEPT WHERE EXISTING DRAINAGE STRUCTURES ARE BEING UTILIZED IN THE NEW CONSTRUCTION, LOCATION OF THE RAMP SHOULD TAKE PRECEDENCE OVER LOCATION OF DRAINAGE STRUCTURES.

THE NORMAL GUTTER LINE PROFILE SHALL BE MAINTAINED THROUGH THE AREA OF THE RAMP.

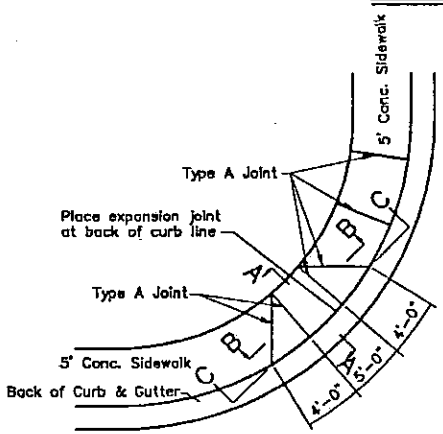

PLAN VIEW

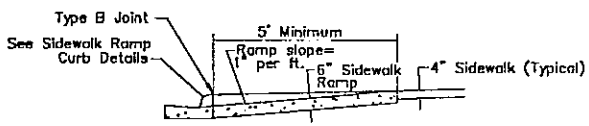

SEC. A-A

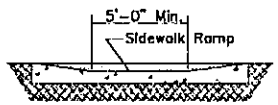

SEC. B-B

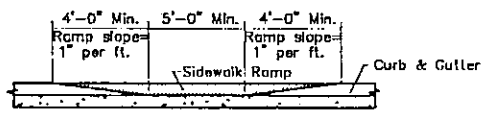

SEC. C-C

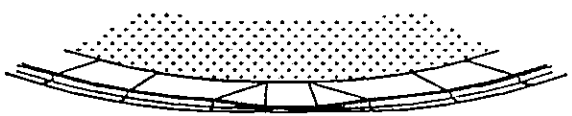

3-D VIEW

TYPE B SIDEWALK RAMP

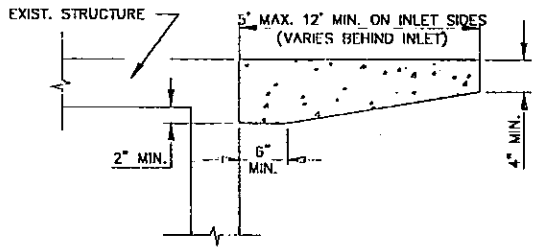

SIDEWALK ABUTTING CURB INLET DETAIL

NOTE: EXTRA LABOR & MATERIALS SUBSIDIARY TO 4" CONC. SIDEWALK. APPLY TO ALL THREE SIDES OF THE STRUCTURE.

BALDWIN CITY, KANSAS	
RAMPS	
DATE: 4-7-94	SH. OF
DRAWN:	APPVD: RAW

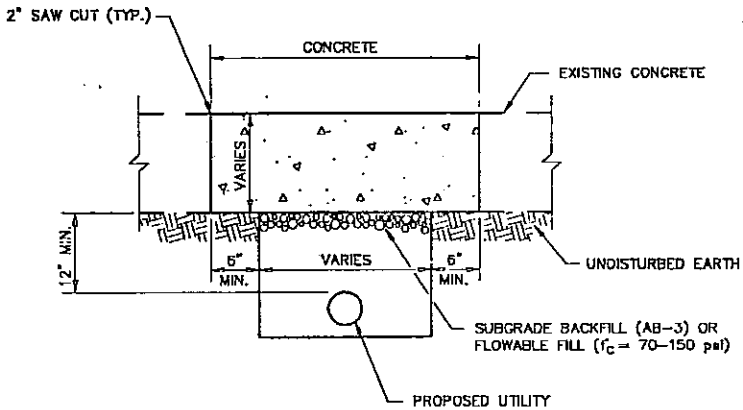

CLASS A STREET REPAIR
CONCRETE PAVEMENT

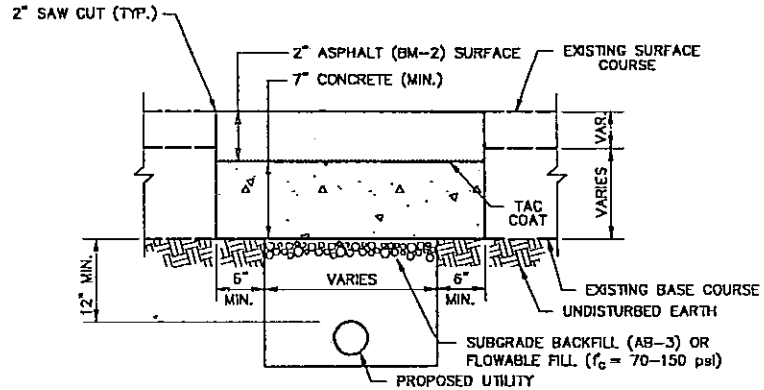

CLASS B STREET REPAIR
ASPHALTIC CONCRETE

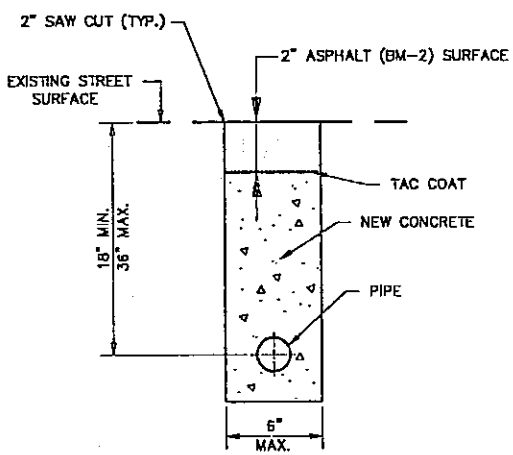

NARROW TRENCH

NOTES:

1. ANY PERSON WHO MAKES ANY EXCAVATION IN, ON, UNDER, OR THROUGH ANY PUBLIC RIGHT-OF-WAY WITH OR WITHOUT A PERMIT IS OBLIGATED TO CLOSE SUCH EXCAVATION WITHIN FIFTEEN DAYS OF COMMENCEMENT THEREOF, SO AS TO RESTORE THE SURFACE, PERMANENTLY REPAIR ANY SINKING OR DAMAGE TO THE SURFACE OR IMPROVEMENTS THEREON RESULTING FROM SUCH EXCAVATION WITHIN ONE YEAR THEREAFTER.
2. ANY EXCAVATION LEFT OPEN OVERNIGHT ON ANY THOROUGHFARE OR COLLECTOR TYPE STREET SHALL BE SECURELY PLATED.
3. ALL CRUSHED STONE USED AS AGGREGATE FOR CONCRETE CONSTRUCTION SHALL BE OBTAINED FROM QUARRIES AND BEDS DESIGNATED BY THE KANSAS DEPARTMENT OF TRANSPORTATION AS MEETING DURABILITY REQUIREMENTS OF CLASS 1 OR CLASS 6.
4. NARROW TRENCH TO BE USED ONLY WITH THE APPROVAL OF THE CITY ENGINEER.

STREET TRENCHING

BALDWIN CITY, KANSAS	
STREET TRENCHING	
DATE: 4-7-94	SH. OF
DRAWN:	APPVD: RAW

V. STORM DRAINAGE DESIGN STANDARDS

DESIGN CRITERIA

SECTION 5600 STORM DRAINAGE SYSTEMS AND FACILITIES

Adapted from criteria published by the
Kansas City Metropolitan Chapter
of the American Public Works Association
for the City of Baldwin City, Kansas

Table of Contents

Section	Title
5601	**GENERAL**
5601.1	Introduction
5601.2	Definitions
5601.3	General Requirements
5601.4	Existing Drainage System
5601.5	System Types and Applications
5601.6	Waivers
5601.7	Other References
5601.8	Return Frequencies
5602	**HYDROLOGY AND HYDRAULICS**
5602.1	Scope
5602.2	Runoff Coefficients
5602.3	Rainfall Mass
5602.4	Unit Hydrographs
5602.5	Rainfall Intensity
5602.6	Computation Methods for Runoff
5602.7	Hydraulic Calculations for Pipes, Culverts, and Open Channels
5602.8	Entrance Control
5602.9	Outlet Control
5603	**INLETS, MANHOLES, AND JUNCTION BOXES**
5603.1	Inlet Design
5603.2	Freeboard Requirements
5603.3	Inverts and Pipes
5603.4	Gutter Flow
5603.5	Gutter Capacity
5603.6	Street Grade on Vertical Curves
5603.7	Loading Conditions for Structures
5604	**ENCLOSED PIPE SYSTEMS**
5604.1	Easements
5604.2	Capacity
5604.3	Surcharge
5604.4	Energy Dissipation
5604.5	Velocity Within the System
5604.6	Loading

5605 **OPEN CHANNELS**
5605.1 Easements
5605.2 Freeboard
5605.3 Channel Linings
5605.4 Lining Material
5605.5 Side Slopes
5605.6 Alignment Changes
5605.7 Special Improved Channels
5605.8 Vertical Wall Channels

5606 **STORMWATER DETENTION AND RETENTION**
5606.1 Scope
5606.2 Easements
5606.3 Maintenance and Continued Performance
5606.4 Performance Criteria
5606.5 Detention Methods
5606.6 Computational Methods
5606.7 Required Submittals
5606.8 Additional Requirements

5607 **PLAN REQUIREMENTS**
5607.1 Scope
5607.2 General
5607.3 Scale
5607.4 Required Information

5608 **FIGURES AND TABLES**
Figure 1 Rainfall
Figure 2 Overland Flow (Inlet) Time Nomogram
Figure 3 Channel Flow Time Nomogram
Figure 4 Reserved
Figure 5 Reserved
Figure 6 Annual Sediment Storage
Table A Manning's Roughness Coefficient n
Table B Head Loss Coefficient k
Figure 7-1 Headwater Depth for Box Culverts with Inlet Control
Figure 7-2 Headwater Depth for Concrete Pipe Culverts with Inlet Control
Figure 7-3 Headwater Depth for Oval Concrete Pipe Culverts Long Axis Horizontal with Inlet Control
Figure 7-4 Headwater Depth for Oval Concrete Pipe Culverts Long Axis Vertical with Inlet Control
Figure 7-5 Headwater Depth for C.M. Pipe Culverts with Inlet Control
Figure 7-6 Headwater Depth for C.M. Pipe-Arch Culverts with Inlet Control
Figure 7-7 Headwater Depth for Circular Pipe Culverts with Bevelled Ring with Inlet Control
Figure 7-8 Head for Concrete Pipe Culverts Flowing Full n = 0.012
Figure 7-9 Head for Concrete Box Culverts Long Axis Horizontal or Vertical Flowing Full n = 0.012

Figure 7-10 Head for Oval Concrete Pipe Culverts
Long Axis Horizontal or Vertical
Flowing Full n = 0.012
Figure 7-11 Head for Standard C.M. Pipe Culverts
Flowing Full n = 0.012
Figure 7-12 Head for Standard C.M. Pipe-Arch Culverts
Flowing Full n = 0.012
Figure 7-13 Head for Structural Plate Corr. Metal Pipe
Culverts Flowing Full n = 0.0328 to 0.0302
Figure 7-14 Head for Structural Plate Corr. Metal
Pipe-Arch Culverts 18 in. Corner Radius
Flowing Full n = 0.0327 to 0.0306
Figure 8-0 Curb Inlets Minimum Hydraulic Dimensions
Table 8-1 Curb Inlet Capacity for 12-foot Gutter Spread
Table 8-2 Curb Inlet Capacity for 11.5-foot Gutter Spread
Table 8-3 Curb Inlet Capacity for 10.5-foot Gutter Spread
Figure 8-1 Inlet Capacity Curves with L = 5'0"
Figure 8-2 Inlet Capacity Curves with L = 8'-0"
Figure 8-3 Inlet Capacity Curves with L = 11'-0"
Figure 8-4 Capacity of Curb Opening Inlet at Low Point in Grade
Figure 9 Nomograph for Flow in Triangular Channels
Figure 10 Hydraulic Elements of Circular Conduits
Figure 11 Simplified Volume Chart for Detention Facilities

5609 **STANDARD DRAWINGS**

DESIGN CRITERIA

SECTION 5600 STORM DRAINAGE SYSTEMS AND FACILITIES

SECTION 5601 GENERAL

5601.1 **Introduction:** This criteria provides uniform procedures for designing and checking the design of storm drainage systems under the rainfall and land characteristics typical of the City of Baldwin City, Kansas. Specific criteria have been developed and are applicable to the types of drainage systems and facilities ordinarily encountered in local urban and suburban areas. Other special situations may be encountered that require added criteria or more complex technology than included herein. Any design procedure conforming to current accepted engineering practice, including the application of computers, may be used for the design of storm drainage systems in lieu of the computation methods presented in this criteria, providing equivalent results are obtained.

5601.2 **Definitions:**

A. **Bank Line:** The line of intersection, above the normal depth of flow at design capacity, of the side slope of an open channel and the adjacent ground.

B. **City:** The municipality or body having jurisdiction and authority to govern.

C. **City Engineer:** The municipal public works official or body having jurisdiction and authority to review and approve plans and designs for storm drainage systems.

D. **Controlled Area:** The part of the tributary area for which a detention facility is designed to control peak discharge rates.

E. **Detention Storage:** The volume occupied by water above the level of the spillway crest during operation of a storm water detention facility.

F. **Dry Detention Facility:** Any detention facility designed to permit no permanent impoundment of water.

G. **Developer:** Any person, partnership, association, corporation, public agency, or governmental unit proposing to or engaged in "development" as defined below; except the widening, resurfacing, or other improvement to existing streets, alleys, and sidewalks.

H. **Development:** Any activity, including subdivision, that alters the surface of the land to create additional impervious surfaces, including, but not limited to, pavement, buildings, and structures; except:

1. Additions to, improvements, and repair of existing single-family and duplex dwellings.

2. Construction of any buildings, structures, and/or appurtenant service roads, drives, and walks on a site having previously provided storm water control as part of a larger unit of development.

3. Remodeling, repair, replacement, and improvements to any existing structure or facility and appurtenances that does not cause an increased area of impervious surface on the site in excess of 10 percent of that previously existing.

4. Improvements on any site having a gross land area of one-half acre or less, regardless of land use.

5. Construction of any one new single-family or duplex dwelling unit, irrespective of the site area on which the same may be situated.

I. **Easement:** Authorization by a property owner for the use by another for a specified purpose, of any designated part of the property.

J. **Emergency Spillway:** A device or devices used to discharge water under conditions of inflow that exceed the design outflow from a detention facility. The emergency spillway functions primarily to prevent damage to the detention facility that would permit the sudden release of impounded water.

K. **Freeboard:** The difference in elevation between the top of a structure such as a dam or open channel and the maximum design water surface elevation or high water mark. It is an allowance against overtopping by waves or other transient disturbances.

L. **Improved Channel:** Any channel changed by grading or the construction of lining materials as approved by the City Engineer.

M. **Natural Channel:** An existing channel that has not been altered by previous construction.

N. **Owner:** The owner of record of real property.

O. **Principal Spillway:** A device such as an inlet, pipe, weir, etc., used to discharge water during operation of the facility under the conditions of the 100-year or less return frequency.

P. **Private Detention Facility:** Any detention facility located on and controlling discharge from a site wholly owned and controlled by one owner and not platted for future subdivision of ownership. Also, all facilities incorporating detention storage of storm water in or on any of the following:

1. Roofs or buildings or structures also used for other purposes.

2. Paved or surfaced areas also used for other purposes.

3. Enclosed or underground pipes or structures on private property when the surface is used for other purposes.

Q. **Public Detention Facility:** Any detention facility controlling discharge from a tributary area owned by more than one owner and/or platted for future subdivision of ownership, except as defined as a private detention facility herein.

R. **Registered Professional Engineer:** A licensed engineer who is registered with and authorized by the "State Board" to practice within the state of registration.

S. **Return Frequency:** The statistical average interval between rainfalls of equal magnitude.

T. **Sediment Storage:** The volume allocated to contain accumulated sediments within a detention facility.

U. **Site:** A tract or contiguous tracts of land owned and/or controlled by a developer or owner. Platted subdivisions, industrial and/or office-commercial parks, and other planned unit developments shall be considered a single site.

V. **Storm Drainage System:** All of the natural and man-made facilities and appurtenances such as ditches, natural channels, pipes, culverts, bridges, open improved channels, street gutters, inlets, and detention facilities which serve to convey surface drainage.

W. **Storm Water Detention Facility:** Any structure, device, or combination thereof with a controlled discharge rate less than its inflow rate.

X. **Tributary Area:** All land draining to the point of consideration, regardless of ownership.

Y. **Wet Detention Facility:** A detention facility that is designed to include permanent storage of water in addition to the temporary storage used to control discharge rates from the facility.

5601.3 **General Requirements:** The design shall be accomplished under the direction of a Registered Professional Engineer. The design shall also be based on land use in the tributary area as zoned, actually developed, or indicated by an adopted future land use plan, whichever basis produces the greatest runoff.

5601.4 **Existing Drainage System:** Existing drainage system component pipes, structures, and appurtenances within the project limits may be retained as elements of an improved system providing:

1. They are in sound structural condition.

2. Their hydraulic capacity, including surcharge, is equal to or greater than the capacity required by this criteria.

3. Easements exist or are dedicated to allow operation and maintenance.

Discharge from an existing upstream storm drainage system shall be computed meeting the hydraulic capacity of this criteria. The computed discharge shall be used to design the new downstream system even if the actual capacity of the existing upstream system is less.

5601.5 **System Types and Applications:**

A. **Enclosed Systems:** Enclosed systems consisting of underground pipes, culverts, and similar functional underground structures shall be used to convey stormwater at all locations:

1. Where the design peak discharge of a 10-year return period storm is equal to or less than the capacity of a 72-inch diameter round pipe having a Manning's "n" of 0.013, and designed in accordance with Section 5604.

2. Within the right-of-way of improved streets, regardless of system design capacity.

3. Within 60-feet of any existing or proposed habitable building, regardless of system design capacity.

4. Where the design peak discharge of a 10-year return period storm equals or exceeds 8 c.f.s. and the collected drainage is generated from more than 1 lot.

Enclosed systems may be used to convey stormwater at all locations where open systems are permitted.

B. **Open Systems:** Open systems consisting of natural and/or improved open channels with intermittent culverts or bridges crossing streets and other surfaced areas may be used to convey stormwater at all locations where the use of an enclosed system is not required by the foregoing criteria.

C. **Stormwater Detention/Retention Facilities:** Detention facilities shall be provided in connection with the development of land whenever:

1. Homes, buildings, or other structures downstream from a proposed development are flooded in a 100-year or more frequent flood.

2. Flood damage problem areas have been identified, or an engineering study as required by Section 5601.6 indicates the proposed development would cause or increase such flooding.

These requirements to provide detention apply to all development except when downstream flooding is entirely confined within the limits of the 100-year flood plain as defined by the Federal Flood Insurance Study current at the time development is proposed.

D. **Overflow Systems:** Each conveyance element of the stormwater drainage system (whether enclosed or open) shall include an overflow system having sufficient hydraulic capacity when combined with the capacity of the conveyance elements to convey the peak discharge generated by a 100-year return period storm without damage to land or buildings, defined as:

100-year stage, plus one foot freeboard, at an elevation equal to or greater than the lowest elevation at which water may enter any proposed or existing building or structure.

5601.6 **Waivers:** The City Engineer may waive requirements to provide specific types of stormwater elements as follows:

A. **Detention/Retention Facilities:** Detention may be waived and/or release rates other than those released by Section 5606 may be approved by the City Engineer when:

1. The developer makes arrangements to provide an improved downstream conveyance system of hydraulic capacity meeting the requirements of this criteria.

2. A detention facility would increase the downstream peak rate of discharge by creating a delayed peak.

B. **Study:** The Developer provides an adequate study by a registered professional engineer that quantifies the problems and demonstrates that a waiver of the requirement to provide detention facilities is appropriate.

C. **Overflow Channels:** In previously developed areas, requirements to provide for 100-year storm conveyance may be reduced in circumstances where 100-year protection is not reasonably attainable due to the location of damageable improvements with respect to the drainage system.

5601.7 **Other References:** Other agencies have criteria and regulations pertaining to drainage systems which may complement this criteria. When conflicts are encountered, the most rigorous criteria shall govern.

A. **Federal Insurance Agency - Floodplain Regulations and Implementing Ordinances Adopted By Municipalities:** Drainage systems designed within the limits of the designated 100-year floodplain on the principal stream shall be designed to convey the flood as defined by applicable published floodplain information studies. For areas located in FIA Zone "A" outside the detailed study area, the Developer shall prepare studies and calculations establishing the floodplain, and floodway elevation and width. These calculations shall be submitted to the reviewing agency for approval.

B. **Kansas Department of Agriculture:** Rules and regulations of the Water Resources Board shall apply.

5601.8 **Return Frequencies:** Enclosed and open channel conveyance system components shall be designed for the following return period storms, irrespective of the land use in which the system is located or the land use in the drainage area tributary to the system:

A. **In-System Capacity:**

1.	Floodway in 100-year Flood Plain	100-year
2.	Bridges, Pipes, and Culverts Crossing Arterial Streets	50-year
3.	All other System Components	10-year

B. **Overflow Channels:** The combined capacity of the overflow channel and in-system conveyance element shall be sufficient to convey the 100-year storm at all locations; except that an overflow depth not exceeding seven (7) inches at the lowest point of the travelled way will be permitted where culverts cross streets.

SECTION 5602 HYDROLOGY AND HYDRAULICS

5602.1 **Scope:** This section sets forth the hydrologic parameters to be used for computations involving the definition of runoff mass and peak rates to be accommodated by the storm drainage system.

5602.2 **Runoff Coefficients:** Runoff Coefficients relative to development and land use shall have the following values:

LAND USE/ZONING		AVERAGE PERCENT IMPERVIOUS	AVERAGE PERCENT PERVIOUS	RATIONAL METHOD "C"	S.C.S. CURVE NUMBER
a.	Business				
	Downtown Area	95	5	0.87	96
	Neighborhood Areas	85	15	0.81	94
b.	Residential				
	Single-Family Areas	35	65	0.51	83
	Multi-Family Areas	60	40	0.66	88
	Churches & Schools	75	25	0.75	92
c.	Industrial				
	Light Areas	60	40	0.66	88
	Heavy Areas	80	20	0.78	93
	Parks, Cemetaries	10	90	0.36	77
	Railroad Yard Areas	25	75	0.45	80
d.	Undeveloped Areas				
	Permanent Unimproved Areas Greenbelts, etc.	0	100	0.3	75
e.	All Surfaces				
	Impervious: asphalt concrete roofs, etc.	100	0	0.9	98
	Turfed	0	100	0.3	75
	Wet detention basins	100	0	0.9	98

Land areas not zoned; but whose future land use is defined by an adopted land use plan, shall be assigned runoff coefficients for the land use indicated by such plan. Undeveloped areas designated as agricultural or those for which no specific future land use is indicated shall be assigned a minimum of 35 percent impervious surface for purposes of the design of storm drainage systems. (C = 0.51, CN = 83)

As an alternative to the above coefficients; and for areas not listed above (planned building groups, shopping centers, trailer parks, etc.) a composite runoff coefficient based on the actual percentages of pervious and impervious surfaces shall be used.

5602.3 **Rainfall Mass:** The U.S. Soil Conservation Service (SCS) Type 2 twenty-four hour rainfall distribution shall be used for all computations that employ the use of rainfall mass. That rainfall distribution is reproduced as follows:

TIME IN HOURS	ACCUMULATED RAINFALL IN PERCENT OF 24-HOUR RAINFALL
0	0
2.0	2.22
4.0	4.80
6.0	8.00
8.0	12.00
9.0	14.70
9.5	16.30
10.0	18.10
10.5	20.40
11.0	23.50
11.5	28.30
11.75	38.70
12.0	66.30
12.5	73.50
13.0	77.20
13.5	79.90
14.0	82.00
16.0	88.00
20.0	95.20
24.0	100.00

5602.4 **Unit Hydrographs:** The SCS Dimensionless Unit Hydrograph (either curvilinear or triangular) shall be the basis for computation of runoff hydrographs.

5602.5 **Rainfall Intensity:** Rainfall intensity shall be determined from Figure 1 or Table C using a Calculated Time of Concentration, T_C. T_C is equal to the overland flow time to the most upstream inlet or other point of entry to the system, Inlet Time, T_I plus the time for flow in the system to travel to the point under consideration Travel Time, T_T. ($T_C = T_I + T_T$).

A. **Inlet Time:** T_I shall be calculated by the following formula or determined graphically from Figure 2, but shall not be less than 5.0 minutes nor greater than 15.0 minutes.

$$T_I = \frac{1.8\ (1.1 - C)\ D^{1/2}}{S^{1/3}} \text{ where:}$$

T_I = Inlet Time in minutes.

C = Rational Method Runoff Coefficient as determined in accordance with paragraph 5602.2

D = Overland flow distance parallel to slope in feet. (300-feet shall be the maximum distance used for overland flow)

S = Slope of tributary area surface perpendicular to contour in percent.

B. **Travel Time:** T_T shall be calculated as the length of travel in the channelized system divided by the velocity of flow. Velocity shall be calculated by Manning's equation assuming all system elements are flowing full without surcharge. Travel time may be determined graphically from Figure 3 in lieu of calculation.

To provide for future development when the upstream channel is unimproved, the following table shall be used for calculating T_T.

Average Channel Slope, Percent	Velocity in Ft/Sec
<2	7
2 to 5	10
>5	15

5602.6 **Computation Methods for Runoff:** Runoff rates to be accommodated by each element of the proposed storm drainage system shall be calculated using the foregoing criteria for land use runoff factors, rainfall, and system time. The following alternative computation methods are acceptable. Other methods, including computer models may be employed so long as they produce calculated runoff to the system that is substantially the same as that calculated by the foregoing criteria:

A. **Watersheds Less than 600 Acres:** The Rational Method may be used to calculate peak rates of runoff to elements of enclosed and open channel systems, including inlets, when the total upstream area tributary to the point of consideration is less than 600 acres. The Rational Method is defined as follows:

$Q = K\ C\ i\ A$, where

Q = Peak rate of runoff to system in C.F.S.

C = Runoff coefficient as determine din accordance with Paragraph 5602.2

i = Rainfall intensity in inches per hour as determined in accordance with Paragraph 5602.4

K = Dimensionless coefficient to account for antecedent precipitation as follows; except the product of "C" * "K" shall not exceed 1.0.

Years Return Period	"K"
10 and less	1.0
25	1.1
50	1.2
100	1.25

B. **All Watersheds:** The following methods are acceptable for all watersheds:

1. SCS Technical Release No. 55 - "Urban Hydrology for Small Watersheds", 2nd Edition, June 1986.

2. SCS Technical Release No. 20 - "Project Formulation - Hydrology", 2nd Edition, May 1983.

3. U.S. Army Corps of Engineers, Hydrologic Engineering Center - "HEC-1 Flood Hydrograph Package"

Copies of the above publications and micro-computer programs based thereon are available for purchase through National Technical Information Service, U.S. Department of Commerce, Springfield, VA 22161.

5602.7 **Hydraulic Calculations for Pipes, Culverts, and Open Channels:** Computations shall be by Manning's formula:

$$Q = \frac{A\ (1.486)}{n} (R^{2/3})\ (S^{1/2})$$ where:

Q = Discharge in cubic fee per second.

A = Cross sectional area of flow in square feet.

n = Roughness Coefficient (see Table A).

R = Hydraulic radius (R = A/P) in feet.

S = Slope in feet per foot.

P = Wetted perimeter in feet.

Minor losses shall be calculated by:

$h = k\ (V^2/2g)$ where:

h = Head loss in feet.

V = Velocity of flow in feet per second at point of interest.

2g = 64.4 feet per second per second.

k = Coefficient as shown in Table B.

Hydraulic calculations for open channels may also be made by the U.S. Army Corps of Engineers "HEC-2 Water Surface Profiles" computer program.

5602.8 **Entrance Control:** Design variables for culverts operating under entrance control shall be determined from Figure 7-1 through 7-7.

5602.9 **Outlet Control:** Design variables for culverts operating under outlet control shall be determined from Figure 7-8 through 7-14.

SECTION 5603 INLETS, MANHOLES, AND JUNCTION BOXES

5603.1 **Inlet Design:**

A. **Type:** Only curb opening inlets shall be used on public streets, except as approved by the City Engineer.

B. **Capacity:** Inlet capacity shall be rated at 80 percent of the theoretical capacity indicated by Tables 8-1 through 8-3 and Figure 8-1 through 8-3 to allow for partial obstruction and clogging. Capacity for sizes not shown may be interpolated form these figures.

C. **Configuration:** Curb inlets shall be as follows (illustrated by Figure 8.0):

Opening length, inside	4.0 ft. (min)
Width, perpendicular to curb line, inside	3.0 ft. (min)
Setback curb line to face	1.0 ft. (min)
Opening, clear height	6.0 in. (min)
Gutter depression at inlet	6 1/4 in. (min)
Gutter transition length	
(a) Both sides in sump and upstream side of slopes	10.0 ft. (min)
(b) Downstream side on slopes	5.0 ft. (min)

5603.2 **Freeboard Requirements:** Any opening which surface water is intended to enter (or may backflow from) the system shall be 0.5-feet or more above an elevation calculated as follows:

1. Invert elevation of the outlet channel (pipe) of the structure, plus;

2. Depth (diameter) of the outlet channel (pipe), plus;

3. "h" minor losses as determined by Section 5602.7. When 50 percent of more of the discharge enters the structure from the surface, "k" shall be 1.0.

5603.3 **Inverts and Pipes:** The crown(s) of pipe(s) entering a structure shall be at or above the crown of the pipe exiting from the structure and provide a minimum fall of the invert in the structure of 0.2-feet for straight flow through the structure or 0.5-feet fall for all other types of flow (bends more than 22.5 deflection angle, multiple lines entering, enlargement transition, ...etc.) through the structure. The desirable minimum fall across the invert is 0.5-feet.

5603.4 **Gutter Flow:** Inlets shall be located to limit the width of flow in street gutters at the time of peak discharge of a 10-year return period storm to the following limits:

Back to Back of Curb Street Width in Feet	Maximum Allowable Spread in Each Outside Curb Lane from Back of Curb in Feet
28 or less	10.5
Over 28 to 36	11.5
Over 36	12.0
Divided Roadways	As above for each direction roadway
Arterial and Collector Street Intersections and Pedestrian Crosswalks	6.0

5603.5 **Gutter Capacity:** Izzard's Formula or Figure 9 shall be used to determine gutter flow:

$$Q = 0.56 \frac{(z)}{n} (S^{1/2})(D^{8/3})$$ where:

Q = The gutter flow in cubic feet per second.

Z = The reciprocal of the average cross-slope, including gutter section in feet per foot.

S = The longitudinal street grade in feet per foot.

D = The depth of flow at curb face in feet.

n = Manning's "n" see Table A.

5603.6 **Street Grade on Vertical Curves:** The following formula shall be used to determine the street grade (Sx) at any point on a vertical curve using plus for grades ascending forward and minus for grades descending forward, in feet per foot.

$$Sx = S_1 + \frac{X}{L} (S_2 - S_1)$$ where:

Sx = The street grade on a vertical curve at point x, in feet per foot.

S_1 = The street grade at the PC of a vertical curve, in feet per foot.

S_2 = The street grade at the PT of a vertical curve, in feet per foot.

X = The distance measured from the PC to point x on a vertical curve, in feet.

L = The total length of a vertical curve, in feet.

5603.7 **Loading Conditions for Structures:** shall be in accordance with criteria approved by the local government agency.

SECTION 5604 ENCLOSED PIPE SYSTEMS:

5604.1 **Easements:** Permanent easements shall be dedicated to the City for operation and maintenance of the storm drainage facilities. Easement width shall not be less than 15-feet, or the outside width of the pipe or conveyance structure plus 10-feet; whichever is greater. Easements shall be centered on the pipe.

A. **Permanent:** The City Engineer may require wider easements when other utilities are located within the same easement and/or when the depth of cover is greater than 4-feet.

B. **Temporary:** Temporary construction easements of sufficient width to provide access for construction shall be acquired when the proposed work is located in areas developed prior to construction.

5604.2 **Capacity:** Capacity shall be based on either inlet or outlet control, whichever condition indicates the least capacity. Minimum design pipe size shall be 12-inch diameter.

5604.3 **Surcharge:** An enclosed system may be designed to operate with surcharge if the following conditions are met:

1. The Hydraulic Grade Line (HGL) must be 0.5 feet below any openings to the ground or street at all locations.

2. Watertight joints capable of withstanding the internal surcharge pressure are used in the construction.

3. Appropriate energy loses for bends, transitions, manholes, inlets, and outlets, are used in computing the HGL.

4. Energy methods (Bernoulli's equation) must be used for the computations.

5604.4 **Energy Dissipation:** The outfall of all enclosed systems shall be designed so that the exiting velocity does not exceed the following. Effective energy dissipating structures shall be provided if necessary to meet these requirements:

OUTLET CHANNEL TYPE	MAXIMUM EXITING VELOCITY
Natural or Unimproved Channel	5 ft./sec.
Grass Lined Channel	5 ft./sec.
Improved Channel with Riprap Lining	10 ft./sec.
Concrete Lining, or Gabion Revetment or Grouted Riprap Lining, or Excavated in Rock	15 ft./sec.

5604.5 **Velocity Within the System:** The velocity within the system shall be between 3 and 20-feet per second.

5604.6 **Loading:**

A. **Cover:** Minimum depth of cover shall be 18-inches.

B. **Minimum Loading Conditions:**

1. Live Load: H-20

2. Unit Weight of soil cover: 120 pcf

3. Rigid pipes shall be bedded and backfilled to provide a minimum factor of safety of 1.5 at the 0.01-inch crack loading condition.

SECTION 5605 OPEN CHANNELS

5605.1 **Easements:** Permanent easements shall be dedicated to the City for operation and maintenance of open channels.

A. **Improved Open Channels:** Easements shall be as wide as the top of bank width; plus 10-feet on each side. Easements shall be continuous between street right-of-ways. When an improved channel begins or ends at a point other than the right-of-way of a dedicated street, a 15-foot or wider easement graded so as to permit access by truck shall be dedicated from the end of the channel to a street right-of-way.

B. **Natural Channels:** Natural open channel easements shall be the area between the lines of intersection of the natural ground with a plane 12-inches above the design water surface, plus 10-feet measured horizontally on each side thereof; however the width of the easement shall not be less than 30-feet and the width shall be increased if necessary to permit access by truck along the entire length of the channel.

5605.2 **Freeboard:**

1. No "in-channel" freeboard is required above the 100-year frequency design storm water surface profile elevation.

2. Freeboard shall not be required above the design headwater pool elevation at culvert entrance.

5605.3 **Channel Linings:**

1. All improved channels shall be lined to the minimum of the 10-year frequency design storm water profile elevation plus 0.5-foot freeboard minimum.

2. All channel linings, except turf, shall contain provision for relieving back pressures and water entrapment at regular intervals.

3. Lining height on the concave side of curves shall be increased by:

$$y = \frac{D}{4} \text{ where:}$$

y = Increased vertical height of lining in feet.

D = Depth of design flow in feet.

Increased lining height shall be transitioned from y to zero feet over a minimum of:

a. 30(y) feet downstream from the point of tangency (P.T.).
b. 10(y) feet upstream from the point of curvature (P.C.).

5605.4 **Lining Material:** The following types of lining material and minimum thicknesses shall be used to control damage and erosion. All riprap, grouted riprap, and gabion linings shall be designed with a filter fabric in conformance with Section 2605.2.C.2.

A. **Improved Open Channels:** Below the 10-year hydraulic grade line +6 inch Freeboard elevation.

DESIGN FLOW VELOCITY - FPS	LINING MATERIAL
0 to 10	Riprap - 15 inches minimum thickness
0 to 15	Grouted riprap, gabion revetment or paved concrete
Over 15	Paved concrete or sound in situ bedrock

B. **Overflow Open Channels:** Above the elevation of the 10-year hydraulic grade line plus 6-inch Freeboard:

DESIGN FLOW VELOCITY - FPS	LINING MATERIAL
Less than 3	Seeded
0 to 5	Sod, staked
0 to 7	Erosion control blanket as approved by the City Engineer
0 to 10	Riprap - 15-inches minimum thickness
0 to 15	Grouted riprap, gabion revetment or paved concrete
Over 15	Paved concrete or sound in situ bedrock

C. **Other Lining Materials:** Other types of lining materials not specifically listed above may be used when approved by the City Engineer.

5605.5 **Side Slopes:** Side slopes shall not be steeper than:

1. 3 horizontal to 1 vertical for turf lining.

2. 2 horizontal to 1 vertical for all other lining materials.

3. Flatter if necessary for stability of slopes.

5605.6 **Alignment Changes:** Alignment changes shall be achieved by curves having a minimum radius of:

$R = \frac{V^2W}{8D}$ where:

R = Minimum radius on centerline in feet

V = Design velocity of flow in feet per second

W = Width of channel at water surface in feet

D = Depth of flow in feet

5605.7 **Special Improved Channels:** Improved open channels having a design cross sectional flow area of greater than 100-square feet at peak discharge from a 10-year storm may be designed to reduce the height of concrete/rock lining to that required to convey a 2-year storm; subject to the following special requirements:

1. Sod or natural vegetation above the structural lining shall be provided.

2. The elevation of the structural lining material shall be a minimum of 18-inches above the adjacent channel flow line.

5605.8 **Vertical Wall Channels:** Vertical walls may be used for structural lining of improved channels; subject to the following special requirements:

1. Walls shall be designed and constructed to act as retaining walls.

2. Adequate provisions shall be made for pedestrian entry/exit from the channel.

SECTION 5606 STORMWATER DETENTION AND RETENTION

5606.1 **Scope:** This section governs the requirements and design of stormwater detention and retention facilities.

5606.2 **Easements:** Easements shall be dedicated to the city to provide adequate access for inspection, construction, and maintenance of all public detention facility components. The owner shall dedicate the detention facility and easements upon completion of construction and approval by the City Engineer. This shall be land occupied by the facility, plus a 20-foot wide strip around the perimeter of the highest elevation attained by the design storage volume, plus an access easement 20-feet in width between the facility and a public street, except:

1. Private detention facilities as described in Section 5601.2.

2. When multi-purpose wet facilities are planned or are suitable for use a private aquatic recreation or for aesthetic enhancement of the owner's property.

3. When multi-purpose dry facilities incorporate surface recreational improvements.

4. Other special cases.

5606.3 **Maintenance and Continued Performance:** Maintenance of private detention facilities shall be the responsibility of the property owner and shall include:

1. Debris removal and cleaning

2. Cutting of vegetation

3. Repair of erosion

4. Removal of silt

5. Maintenance of structural facilities, including outlet works, not located in a public drainage easement.

6. Annual or more frequent inspections to assure that the detention basin has full storage capacity and all inlet and outlet structures are fully functional.

5606.4 **Performance Criteria:**

A. **General Provisions:** The criteria set forth herein are applicable to detention facilities:

1. Having 1,000 acres or less area tributary to the facility.

2. Impoundments formed by dams which are greater than 10-feet in height. Dams which are greater than 10-feet in height but do not fall into state or federal requirement categories shall be designed in accordance with SCS Technical Release No. 60, "Earth Dams and Reservoirs", August 1981, as Class "C" structures.

3. Other agencies have criteria and regulations pertaining to drainage systems which may complement this criteria. State and federal laws and regulations pertaining to dams shall take precedence over this criteria to the extent that detention facilities may be classified as "dams" thereunder.

   a. Federal Insurance Agency - Floodplain Regulations and Implementing Ordinances Adopted by Municipalities: Drainage system designed within the limits of the designated 100-year floodplain on the principal stream shall be designed to convey the flood as defined by applicable published floodplain information studies. For areas located in FIA Zone "A" outside the detailed study area, the Developer shall prepare studies and calculations establishing the floodplain, elevation and width. These calculations shall be submitted to the reviewing agency for approval.

   b. Missouri Department of Natural Resources: Rules and regulations of the Dam and Reservoir Safety Council shall apply to those Missouri structures classified as dams thereunder.

   c. Kansas State Board of Agriculture: Regulations of the Water Resources Division shall apply.

B. **Release Rate:** The maximum release rate from any development for the 100-year and more frequent storms shall not exceed 1.8.c.f.s. per tributary acre. When areas outside the development are also tributary, their inflow hydrograph(s) may be added to the above maximum release rate to determine the total maximum release rate. If the downstream conditions dictate a lower release rate, then the above release rates do not govern.

C. **Detention Basin Size:** For purposes of evaluation, projects will be classified in two categories according to the acreage of tributary area.

   1. Less than 10 acres: Volume of detention for projects having 10 acres or less tributary to the detention facility may be evaluated using either the "Simplified Volume" Figure 11 or by the more precise methods set forth in Section 5606.4.C.2.

   2. Over 10 acres: For projects of more than 10 acres tributary area the owners/engineers may utilize methodology outlined in Technical Release No. 55 "Urban Hydrology for Small Watersheds," June, 1986. A Type 2 rainfall distribution shall be the required storm hydrograph. Hydrologic simulation models shall be based on not less than Antecedent Moisture Condition II. Detention storage shall be based upon the allowable release rate during the 100-year storm with the development in place.

D. **Principal Spillways:** The principal spillway shall be designed to meet the following requirements:

1. The principal spillway shall be designed to function without requiring attendance or operation of any kind or requiring use of equipment or tools, or any mechanical devices.

2. All discharge from the detention facility when inflow is equal to or less than the 100-year inflow shall be via the principal spillway(s).

3. The design shall allow for discharge of at least 80 percent of the detention storage volume within 24 hours after the peak or center of mass of the inflow has entered the detention basin.

4. The design discharge rate via the principal spillway shall continuously increase with increasing head and shall have hydraulic characteristics similar to weirs, orifices or pipes.

E. **Emergency Spillways:** The emergency spillway may either be combined with the principal spillway or be a separate structure or channel. Emergency spillways shall be designed so that their crest elevation is 0.5-foot or more above the maximum water surface elevation in the detention facility attained by the 100-year storm.

F. **Outlet Works:** Outlet works consisting of valves, gates, pipes, and other devices as necessary to completely drain the facility in 72 hours or less when required for maintenance or inspection shall be provided.

G. **Erosion Control:** Principal spillways and outlet works, as well as conveyance system entrances to detention basins, shall be equipped with energy dissipating devices as necessary to limit the peak discharge velocity. See Section 5604 for velocity criteria.

5606.5 **Detention Methods:** In addition to the foregoing criteria, the following shall be applicable, depending on the detention alternative(s) selected:

A. **Wet Bottom Basins/Retion Facility:** For basins designed with permanent pools:

1. Minimum Depths: The minimum normal depth of water before the introduction of excess stormwater shall be four feet plus a sedimentation allowance of not less than 5 years accumulation determined in accordance with Figure 6. The side slopes of dry and wet basins shall conform as closely as possible to regraded or natural land contours, and should not exceed three horizontal to one vertical. Slopes exceeding this limit shall require erosion control and safety measures.

2. Depth for Fish: If the pond is to contain fish, at least one-quarter of the area of the permanent pool must have a minimum depth of ten-feet plus sedimentation allowance.

B. **Dry Bottom Basins/Detention Facility:** For basins designed to be normally dry:

1. Interior Drainage: Provisions must be incorporated to facilitate interior drainage to outlet structures. Grades for drainage facilities shall not be less than two percent on turf. Concrete swales, with a minimum gradient of 1.0 percent, may be used as need to conduct storm water from turfed bottom areas to the outlet structure.

2. Earth Bottoms: Earth bottoms shall be seeded or sodded.

3. Multipurpose Feature: These shall be designed to serve secondary purposes for recreation, open space, or other types of use which will not be adversely affected by occasional or intermittent flooding, if possible.

C. **Anti-Clogging Protection:** Trash racks or other approved devices shall be installed where required to insure that the principal spillway(s) will remain functional.

D. **Rooftop Storage:** Detention storage may be met in total or in part by detention on roofs. Details of such designs shall include the depth and volume of storage, details of outlet devices and downdrains, elevations and details of overflow scuppers, and emergency overflow provisions. Connections of roof drains to sanitary sewers are prohibited. Design oadings and special building and structural details shall be subject to approval by the City Engineer.

E. **Parking Lot Storage:** Paved parking lots may be designed to provide temporary detention storage of stormwater on a portion of their surfaces. Generally, such detention areas shall be in the more remote portions of such parking lots. Depths of storage shall be limited to a maximum depth of seven inches, and such areas shall be located so that access to and from parking areas is not impaired.

F. **Other Storage:** All or a portion of the detention storage may also be provided in underground or surface detention areas, including, but not limited to, oversized storm sewers, vaults, tanks, swales, etc.

5606.6 **Computational Methods:**

A. **Time of Concentration and Travel Time:** Use methods as outlined in Technical Release No. 55, "Urban Hydrology for Small Watersheds," Chapter 3.

B. **Temporary Storage Volume:** A preliminary value of the storage requirement may be obtained through methods outlined in Technical Release NO. 55, Chapter 6 or other acceptable methods. The storage shall be checked during routing of design hydrographs through the basin and adjusted appropriately.

C. **Hydrograph Routing:** The storage indication method (Modified Puls) of routing a hydrograph through a detention basin may be utilized. Reference: "Introduction to Hydrology", by Warren Viessman, Jr., John W. Knapp, Gary Lewis, Second Edition, Section 7-2.

5606.7 **Required Submittals:** The Owner shall submit the following information and data to the City Engineer.

1. Elevation-area-volume curves for the storage facility including notation of the storage volumes allocated to runoff, sediment, and permanent residual water storage for other uses (wet basins only).

2. Inflow hydrographs for the 10-year and 100-year recurrence interval design storms.

3. Stage-discharge rating curves for each spillway and for combined spillway discharges.

4. Routing curves for the 10-year and 100-year recurrence interval design storms with time plotted as the abscissa and the following plotted as ordinates:

   a. Cumulative inflow volume.
   b. Cumulative discharge.
   c. Stage elevation.
   d. Cumulative storage.

5606.8 **Additional Requirements:**

A. **Access:** Provisions shall be made to permit access and use of auxiliary equipment to facilitate emptying, cleaning, maintenance, or for emergency purposes.

B. **Underground Storage:** Underground detention facilities shall be designed with adequate access for maintenance (cleaning and sediment removal). Such facilities shall be provided with positive gravity outlets. Venting shall be sufficient to prevent accumulation of toxic or explosive gases.

SECTION 5607 PLAN REQUIREMENTS

5607.1 **Scope:** This section governs the preparation of plans for stormwater system projects.

5607.2 **General:** The plans shall include all information necessary to build and check the design of storm drainage systems. The plans shall be arranged as required by the City Engineer. Plans shall be sealed by a Registered Professional Engineer and shall be submitted to the City Engineer for review and approval.

5607.3 **Scale:** Plans shall be drawn at the following minimum scales. Larger scales may be needed to clearly present the design. Bar scales shall be shown on each sheet for each scale.

Plan:	1-inch =	50-feet
Profile:		
Vertical:	1-inch =	10-feet
Horizontal:	1-inch =	50-feet
Cross Sections:		
Vertical:	1-inch =	5-feet
Horizontal:	1-inch =	5-feet
Drainage Area Map:		
On site:	1-inch =	200-feet
Off site:	1-inch =	1,000-feet
Structural Plans:	1/4-inch =	1-foot
Graphic Drawings:		Varies

5607.4 **Required Information:**

A. **Drainage Area Map:** A drainage map shall be included and shall contain the following:

1. Ridge line of the area tributary to each principal element of the system.

2. Note the area in acres.

3. Note the runoff coefficient C for each area.

B. **Plan View:** All designed storm drainage systems shall be drawn in plan view and shall contain the following:

1. North arrow and bar scale.

2. Ties to permanent reference points for each system located outside of the street right-of-way.

3. Identification and location of each pipe, culvert, inlet, structure, and existing utility affecting construction.

4. Right-of-way, property, and easement lines. The 100-year flood plain and setback from the top of bank of an open channel to any building.

5. Existing man-made and natural topographic features, such as buildings, fences, trees, channels, ponds, streams, etc., and all existing and proposed utilities.

6. Location of test borings.

7. Existing and finish grade contours at intervals of 2.0-feet or less in elevation; or equivalent detail indicating existing and finish grades and slopes.

8. A uniform set of symbols subject to approval by the City Engineer.

9. The centerline of open channels within 50-feet of an enclosed drainage system and showing the direction of flow.

10. The existing and proposed drainage systems 100-feet upstream and 100-feet downstream from the development.

C. **Profile View:** All designed storm drainage systems shall be drawn in profile view and shall contain the following:

1. Existing and finish surface grade along the center line of pipe (except street centerline may be used when construction includes street construction).

2. Length, size and slope of each line or channel segment. Slope shall be expressed in percent.

3. Headwater elevation at the inlet end of each culvert.

4. Flow line (invert elevation in and out at each structure).

5. Each existing utility line crossing the alignment shall be properly located and identified as to type, size and material.

6. Test borings.

7. All station and invert elevations of manholes, junction boxes, inlets or other structures.

8. The profile shall show existing grade above the centerline as a dashed line, proposed finish grades or established street grades by solid lines; and shall show the flow line of any drainage channel, either improved and unimproved, within 50-feet of either side of the centerline. Each line shall be properly identified. The proposed sewer shall be shown as double solid lines properly showing the top of the pipe.

9. All manholes, inlets or other structures shall be shown and labeled with appropriate "Standard Drawing" designation.

D. **Cross Sections:** Cross sections shall be drawn for all open channels. Sections shall be at appropriate intervals not greater than 50-feet. Additional sections shall be drawn at all structures and intersecting drainage systems. The following shall be indicated on each section:

1. Ties from centerline to baseline.

2. Existing and proposed grade line.

3. Elevation of the proposed flow line.

4. Cut and fill end areas if required for bid quantities.

E. **Design Information for Each Part of the System:** The plans shall present design information for each culvert, structure, facility, pipe and channel segment and shall contain the following:

1. Tributary area in acres.

2. Design discharge and capacity in cubic feet per second.

3. Runoff coefficient C, design storm return frequency rainfall intensity and Manning's "n".

4. Discharge velocity at design flow.

5. Hydraulic grade line.

6. Type and grade of material (gage, class...etc.)

Schedules which indicate all variable dimensions and elevations covered by standards or "typical" drawings shall be shown on the plans. All design details for nonstandard structures shall be indicated on the plans. A minimum of one plan view and one sectional view shall be shown on the plans for each structure. Additional views may be required if necessary to clearly define the design. A reinforcing bar list is not required. However, the grade, type, size and location of the bars shall be clearly indicated on the plans.

SECTION 5608 FIGURES AND TABLES

FIG. 1 RAINFALL

INTENSITY-DURATION-FREQUENCY

KANSAS CITY, MISSOURI
1896-1972

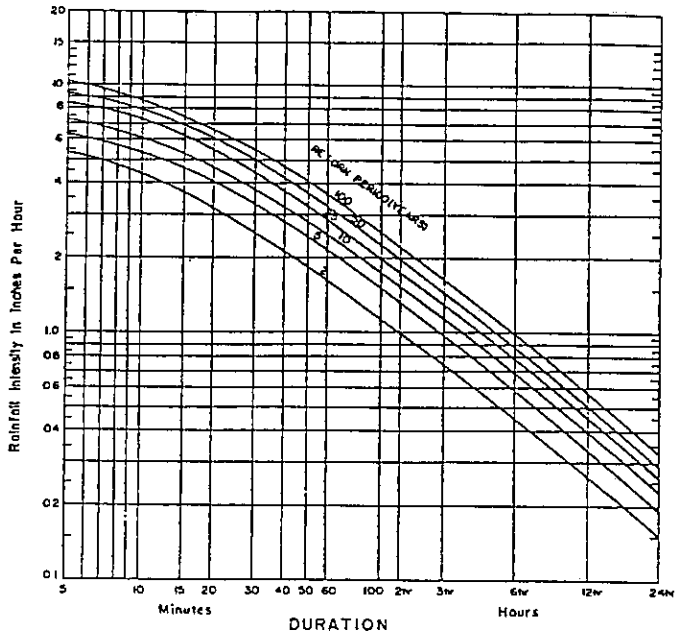

REFERENCES

1. NOAA Technical Memorandum NWS HYDRO-35 National Oceanic and Atmospheric Administration Of The National Weather Service, Department Of Commerce Silver Spring, Md, June 1977

2. Technical Paper No 40, Rainfall Frequency Atlas For Durations From 30 Minutes To 24 Hours And Return Periods From 1yr To 100 Yrs U.S. Weather Bureau, Department Of Commerce, Washington, D.C., January 1963.

3. Design Of Urban Highway Drainage-State Of The Art FHWA-TS-79-225 U.S Department Of Transportation Federal Highway Administration, Washington, D.C., August 1979

TOPEKA, KANSAS
1903-1949, 1951

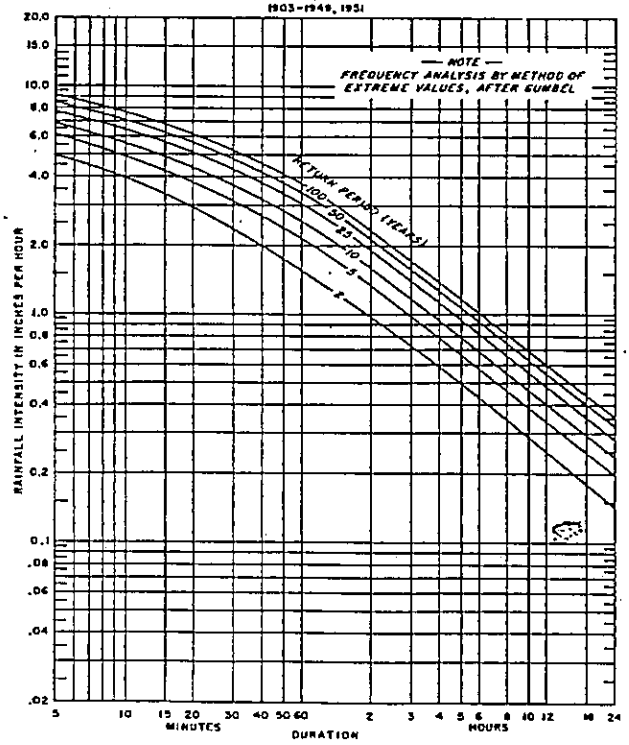

$$T_I = \frac{1.8(1.1-C)D^{1/2}}{S^{1/3}}$$

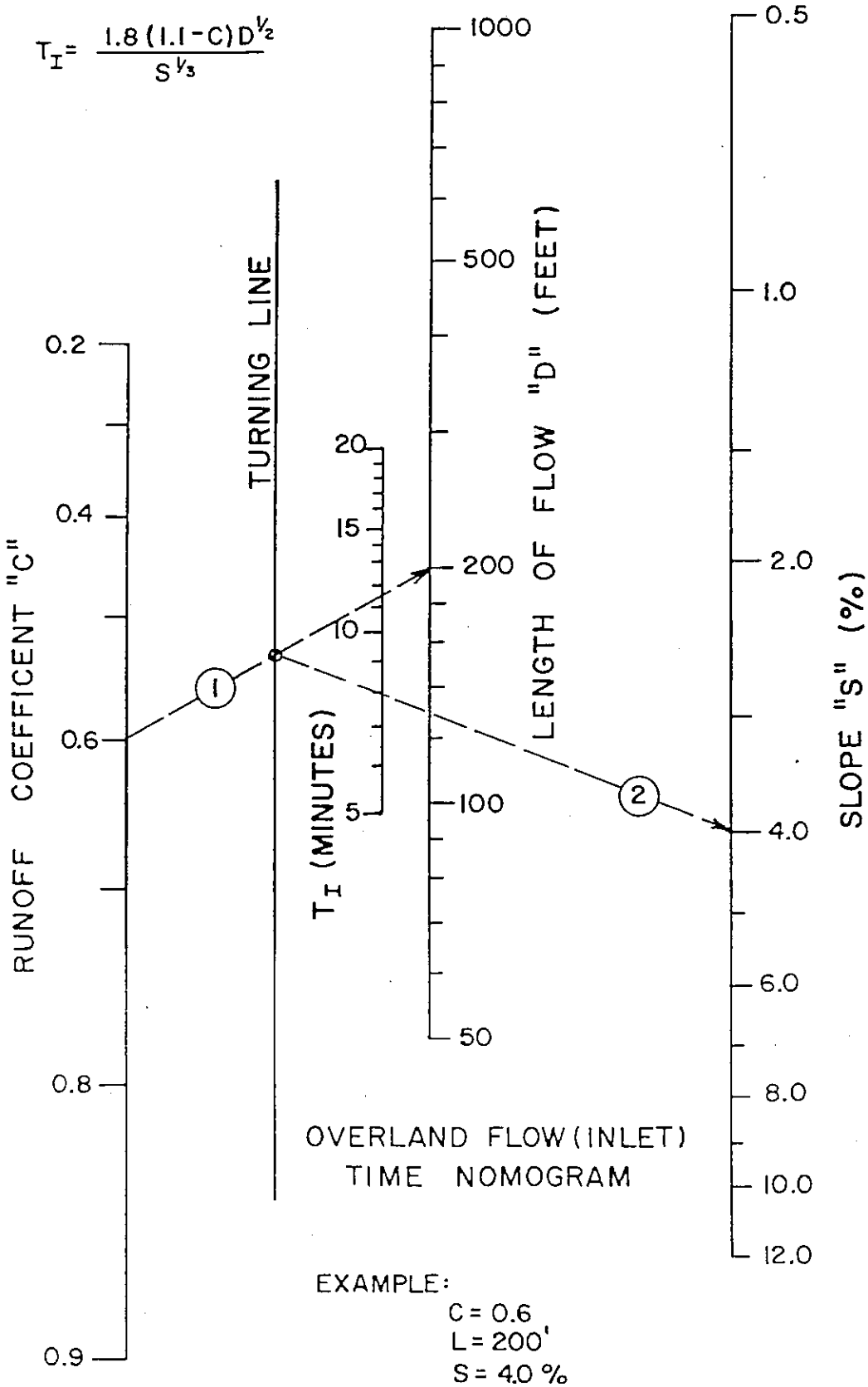

OVERLAND FLOW (INLET) TIME NOMOGRAM

EXAMPLE:

C = 0.6
L = 200'
S = 4.0 %

FROM FIG. -1, TI = 8 Minutes

FIG. 2

CHANNEL FLOW TIME NOMOGRAM

Figure 3 developed by modeling flow in typical representative hydraulic sections using Manning's Equation.

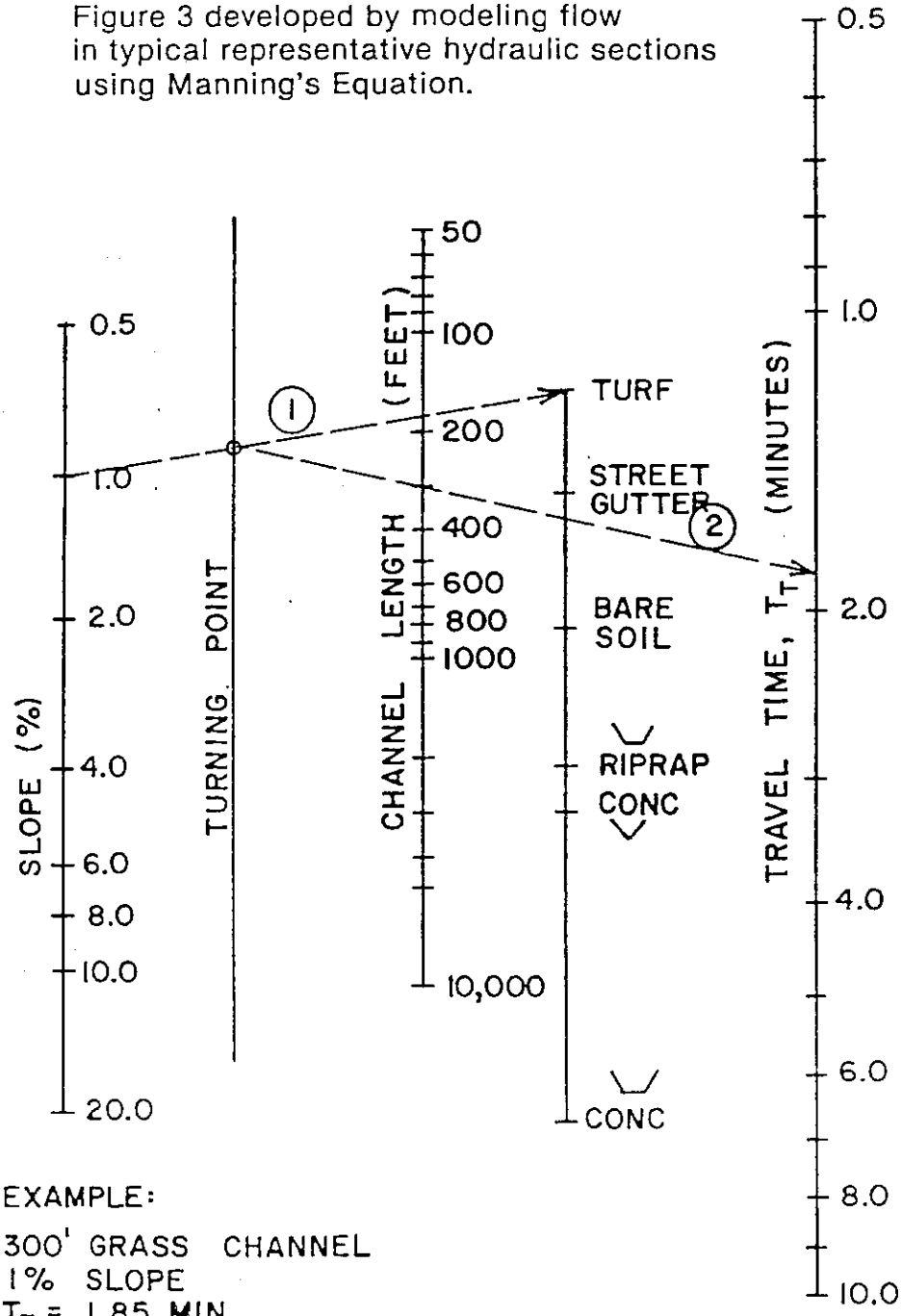

EXAMPLE:

300' GRASS CHANNEL
1% SLOPE
T_T = 1.85 MIN.

(1) Connect Slope & Channel Condition to locate point on Turning Line

(2) Extend line from Turning Line through Channel Length, Read T_T

FIG. 3

EXAMPLE:

TRIBUTARY AREA = 20 ACRES

RATIONAL METHOD RUNOFF COEFFICIENT "C" = 0.6

SEDIMENT STORAGE = 120 CU. FT. PER ACRE PER YEAR

TOTAL SEDIMENT STORAGE = 120 X 20 = 2400 CU. FT. PER YEAR.

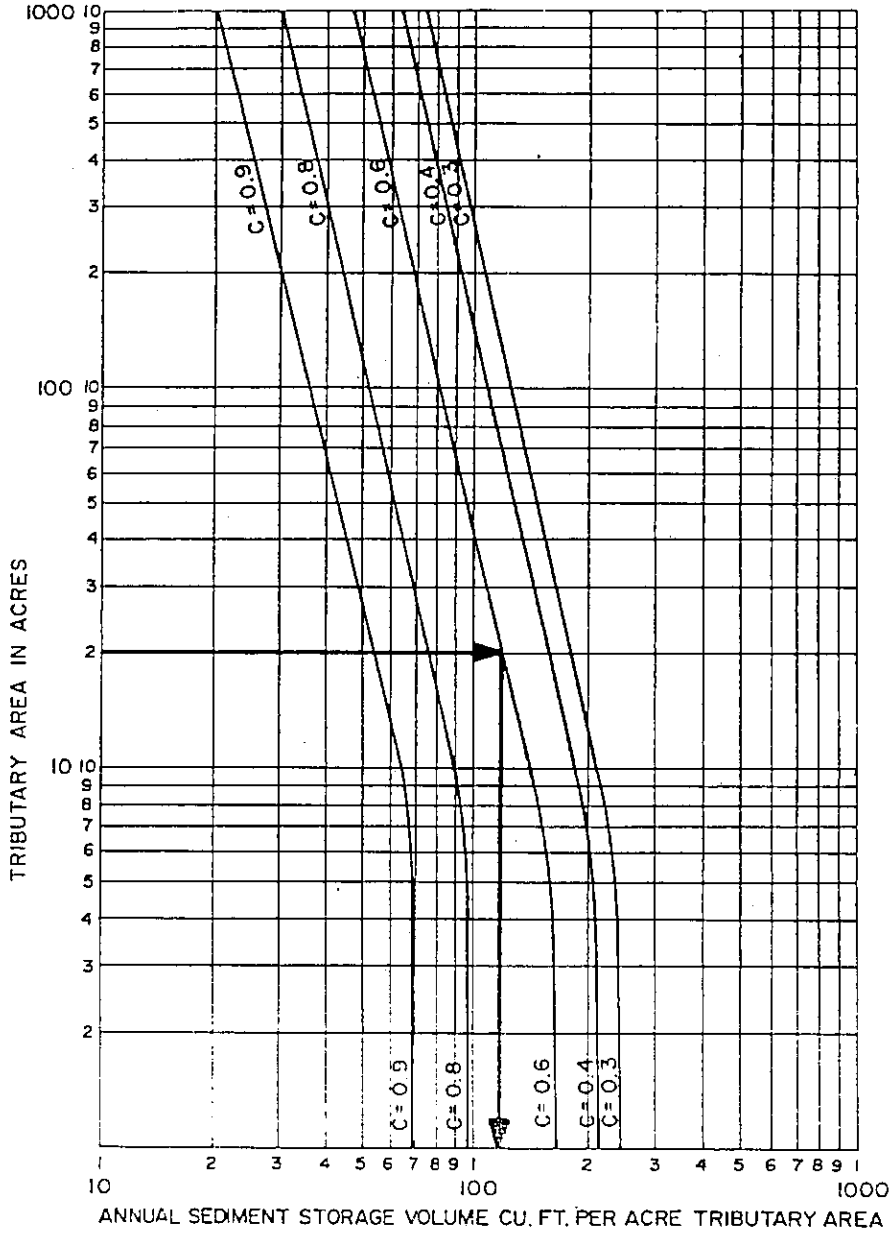

ANNUAL SEDIMENT STORAGE

FIG. 6

Table A

MANNING'S ROUGHNESS COEFFICIENT n

Type of Channel	
Closed Conduits	**n**
Reinforced Concrete Pipe	0.013
Reinforced Concrete Elliptical Pipe	0.013
Corrugated Metal Pipe:	
2⅔x½ in. Annular Corrugations unpaved - plain	0.024
2⅔x½ in. Annular Corrugations paved invert	0.021
3x1 in. Annular Corrugations unpaved - plain	0.027
3x1 in. Annular Corrugations paved invert	0.023
6x2 in. Corrugations unpaved - plain	0.033
6x2 in. Corrugations paved invert	0.028
Vitrified Clay Pipe	0.013
Asbestos Cement Pipe	0.012
Open Channels (Lined)	
Gabions	0.025
Concrete	
Trowel Finish	0.013
Float Finish	0.015
Unfinished	0.017
Concrete, bottom float finished, with sides of	
Dressed Stone	0.017
Random Stone	0.020
Cement Rubble masonry	0.025
Dry Rubble or Riprap	0.030
Gravel bottom, side of	
Random Stone	0.023
Riprap	0.033
Grass (Sod)	0.030
Riprap	0.035
Grouted Riprap	0.030
Open Channels (Unlined) Excavated or Dredged	
Earth, straight and uniform	0.027
Earth, winding and sluggish	0.035
Channels, not maintained, weeds & brush uncut	0.090
Natural Stream	
Clean stream, straight	0.030
Stream with pools, sluggish reaches, heavy underbrush	0.100
Flood Plains	
Grass, no brush	0.030
With some brush	0.090
Street Curbing	0.014

TABLE B CONTINUED

Wingwall at 10° to 25° to barrel	
Square edged at crown	0.5
Wingwalls parallel (extension of sides)	
Square edged at crown	0.7
Side-or-slope-tapered inlet	0.2

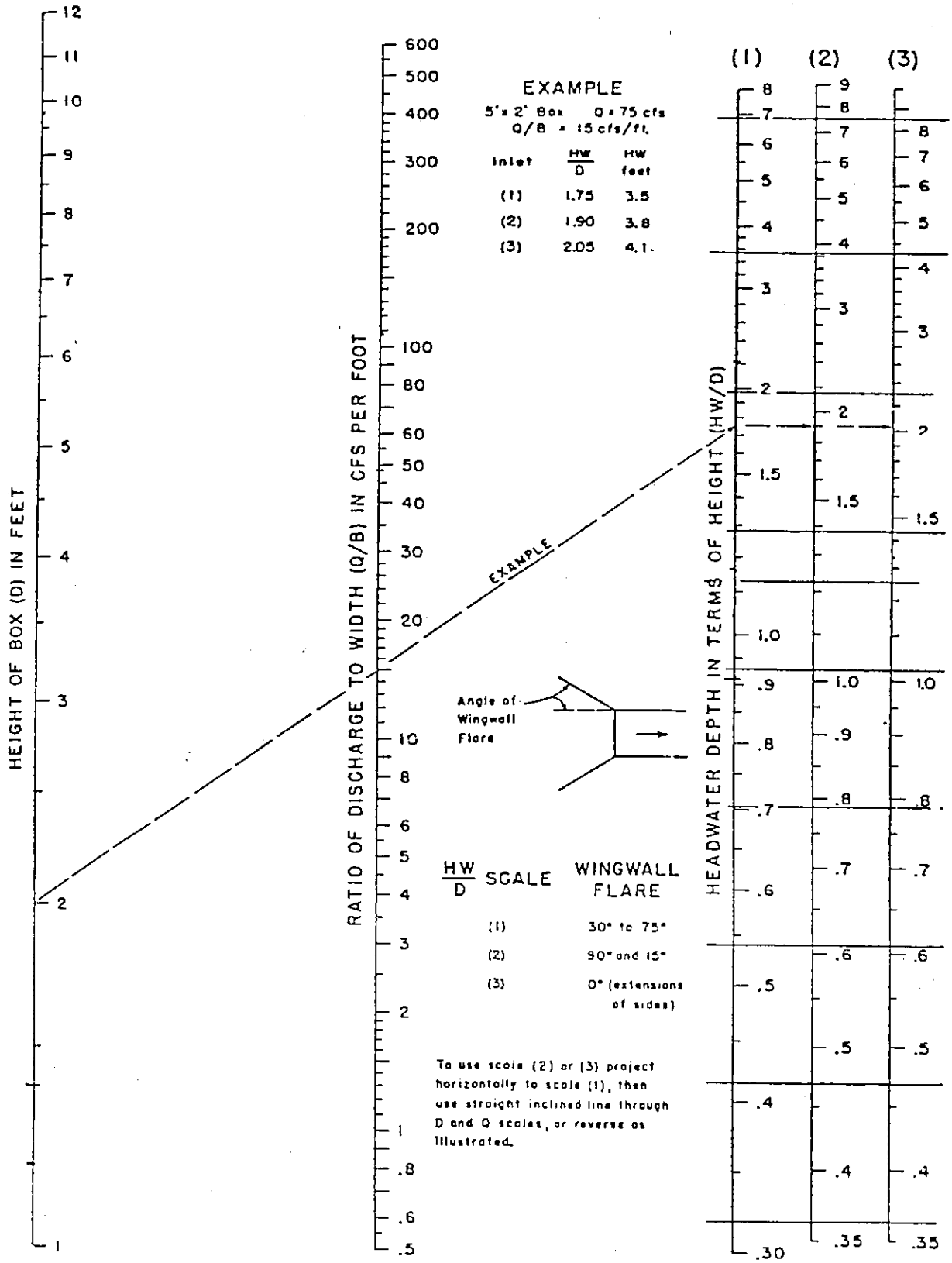

HEADWATER DEPTH FOR BOX CULVERTS WITH INLET CONTROL

FIG. 7-1

BUREAU OF PUBLIC ROADS JAN. 1963

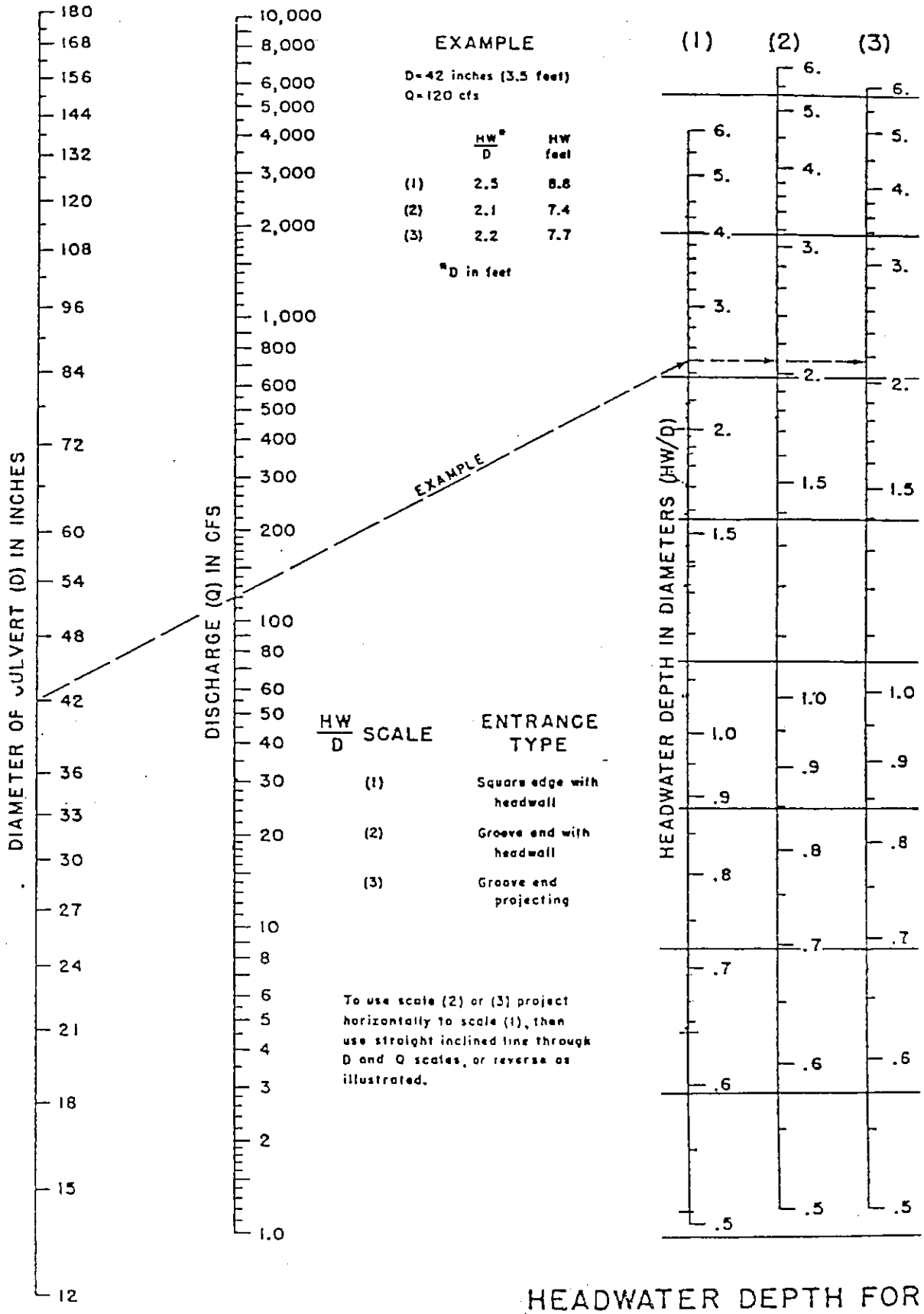

HEADWATER DEPTH FOR CONCRETE PIPE CULVERTS WITH INLET CONTROL

FIG. 7-2

BUREAU OF PUBLIC ROADS JAN. 1963

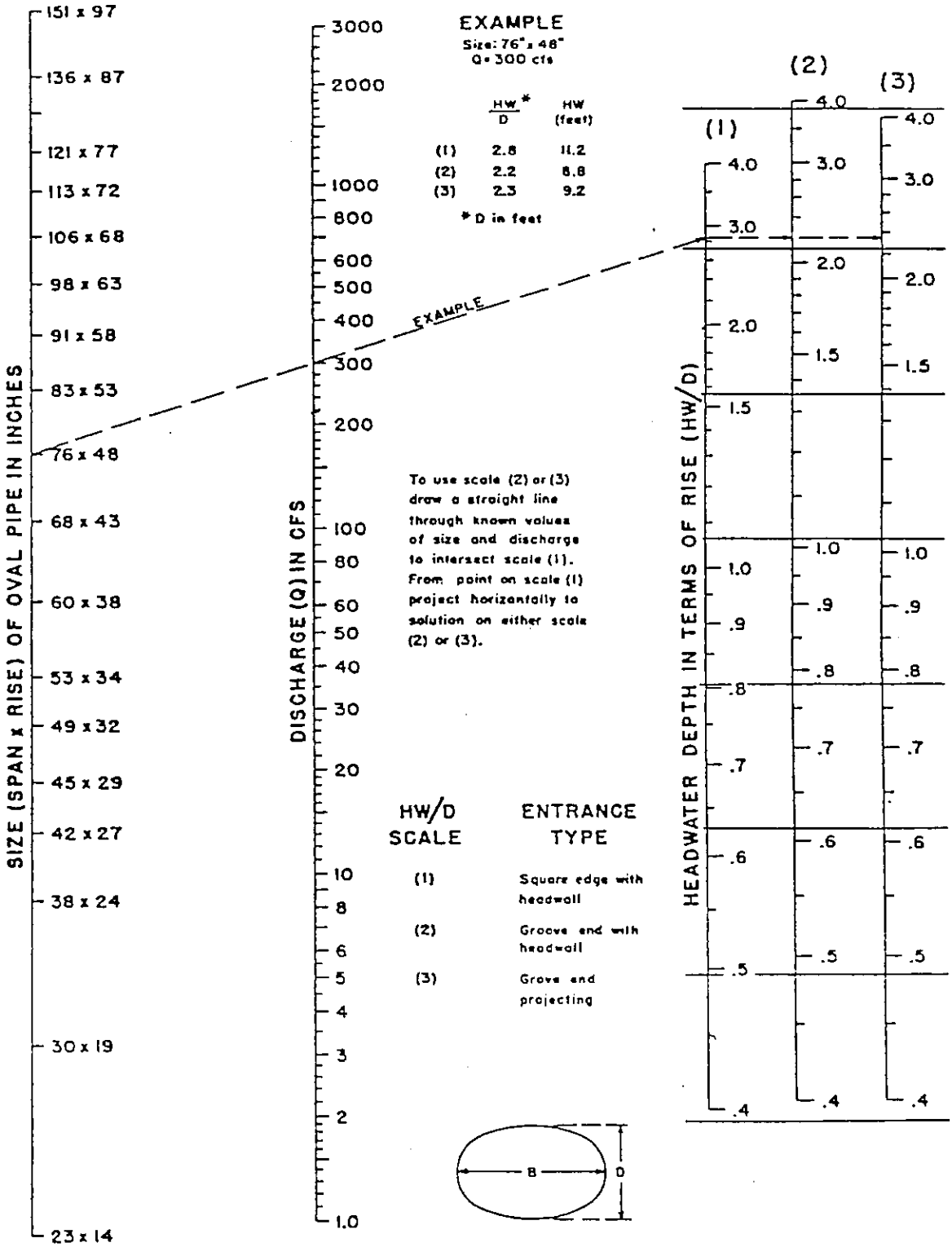

HEADWATER DEPTH FOR
OVAL CONCRETE PIPE CULVERTS
LONG AXIS HORIZONTAL
WITH INLET CONTROL

BUREAU OF PUBLIC ROADS JAN. 1963

FIG. 7-3

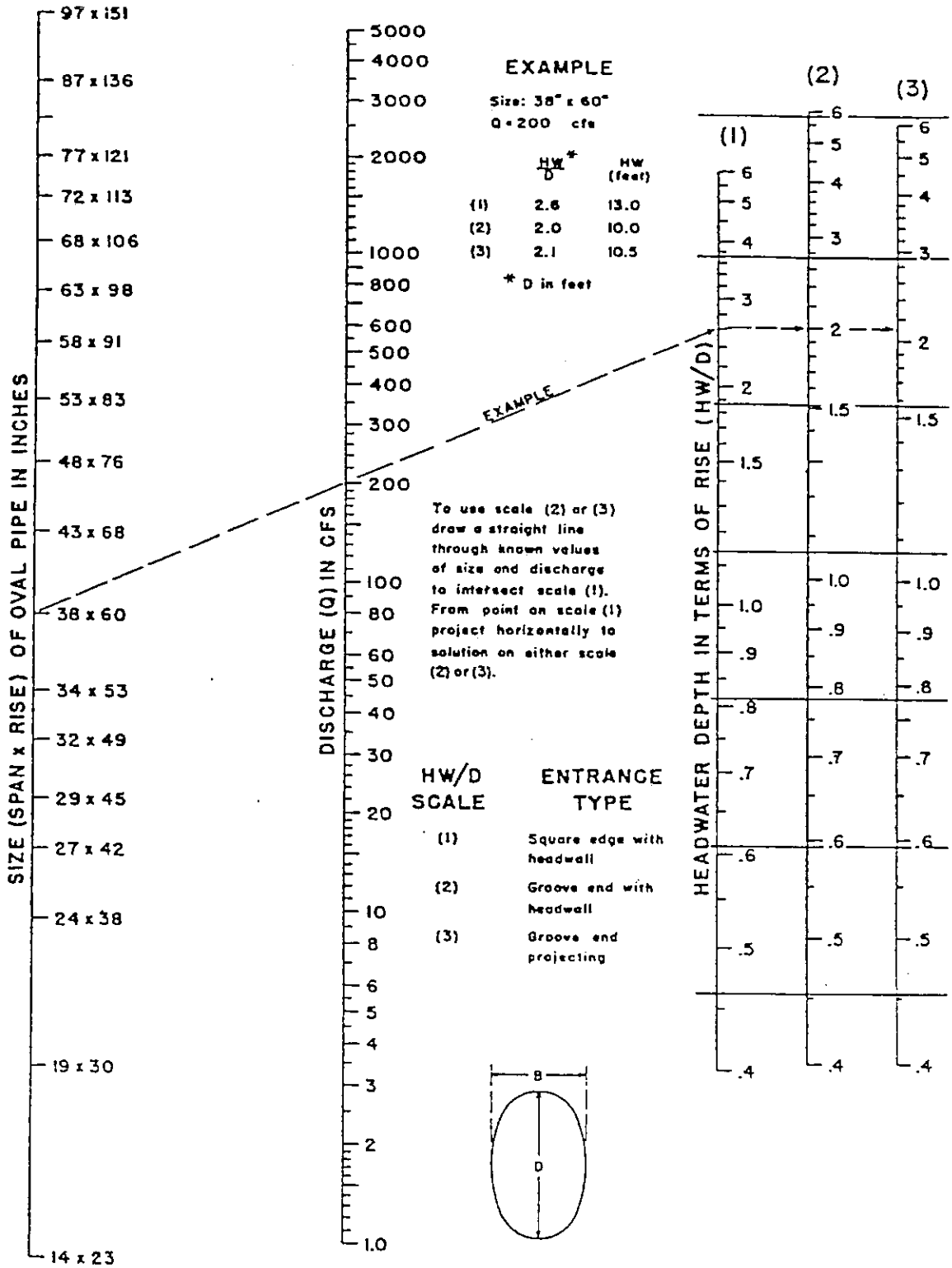

HEADWATER DEPTH FOR
OVAL CONCRETE PIPE CULVERTS
LONG AXIS VERTICAL
WITH INLET CONTROL

BUREAU OF PUBLIC ROADS JAN. 1963

FIG. 7-4

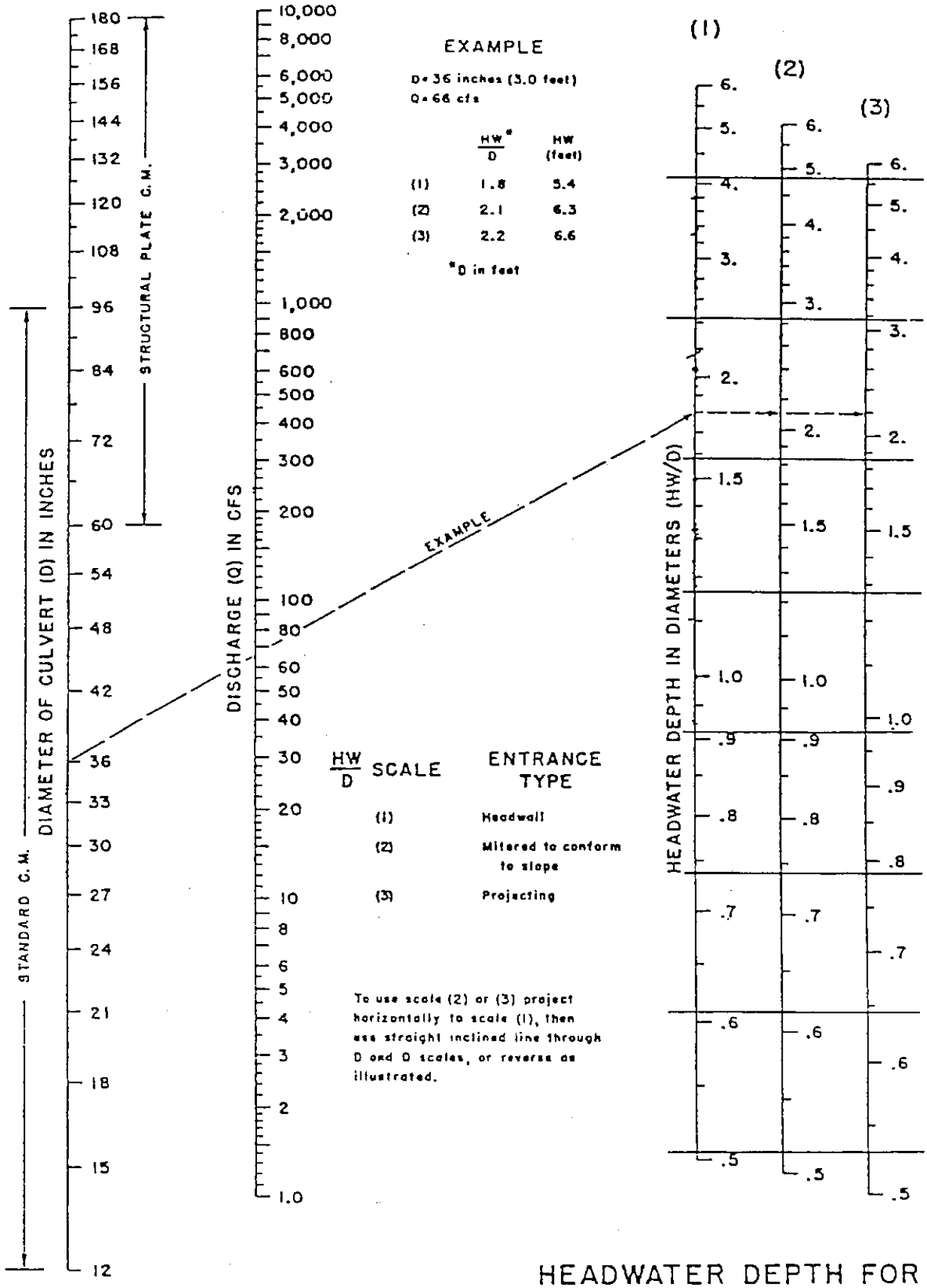

HEADWATER DEPTH FOR C. M. PIPE CULVERTS WITH INLET CONTROL

FIG. 7-5

BUREAU OF PUBLIC ROADS JAN. 1963

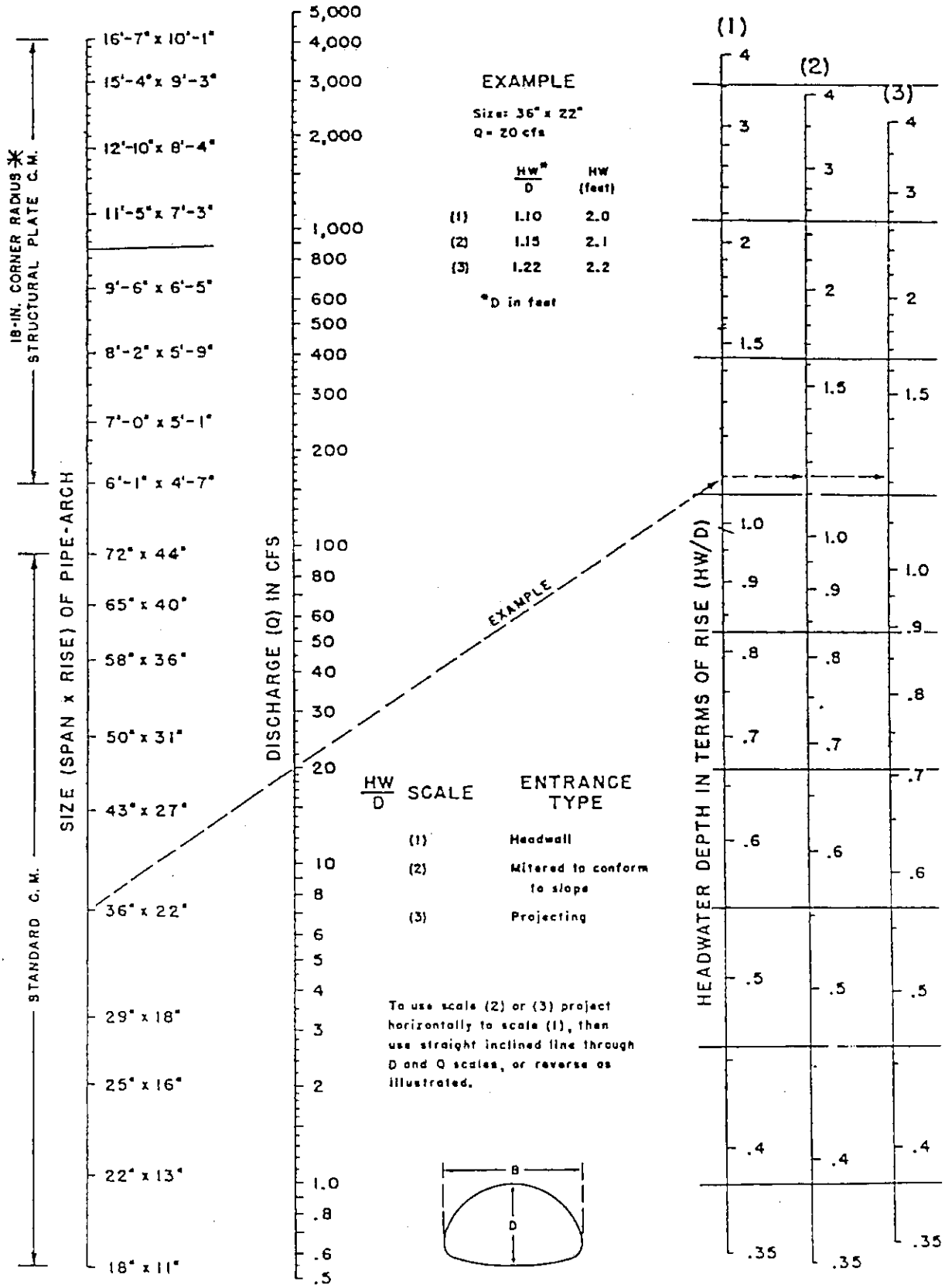

✳ ADDITIONAL SIZES NOT DIMENSIONED ARE LISTED IN FABRICATOR'S CATALOG

BUREAU OF PUBLIC ROADS JAN. 1963

HEADWATER DEPTH FOR C. M. PIPE-ARCH CULVERTS WITH INLET CONTROL

FIG. 7-6

b/D	a/D	c/D	d/D	ENTRANCE TYPE
0.042	0.063	0.042	0.083	A
0.083	0.125	0.042	0.125	B

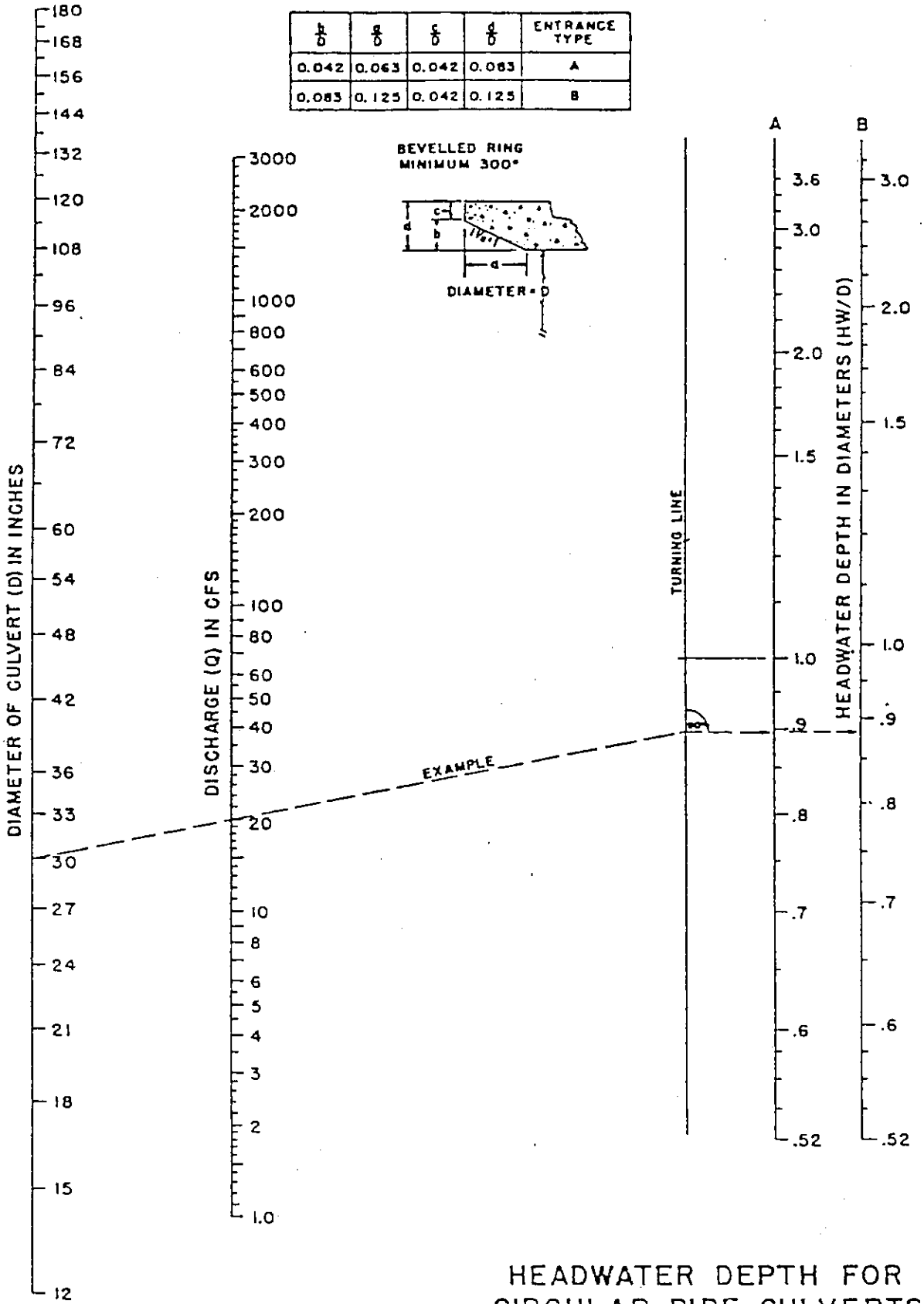

BUREAU OF PUBLIC ROADS
MARCH 1964

HEADWATER DEPTH FOR CIRCULAR PIPE CULVERTS WITH BEVELLED RING INLET CONTROL

FIG. 7-7

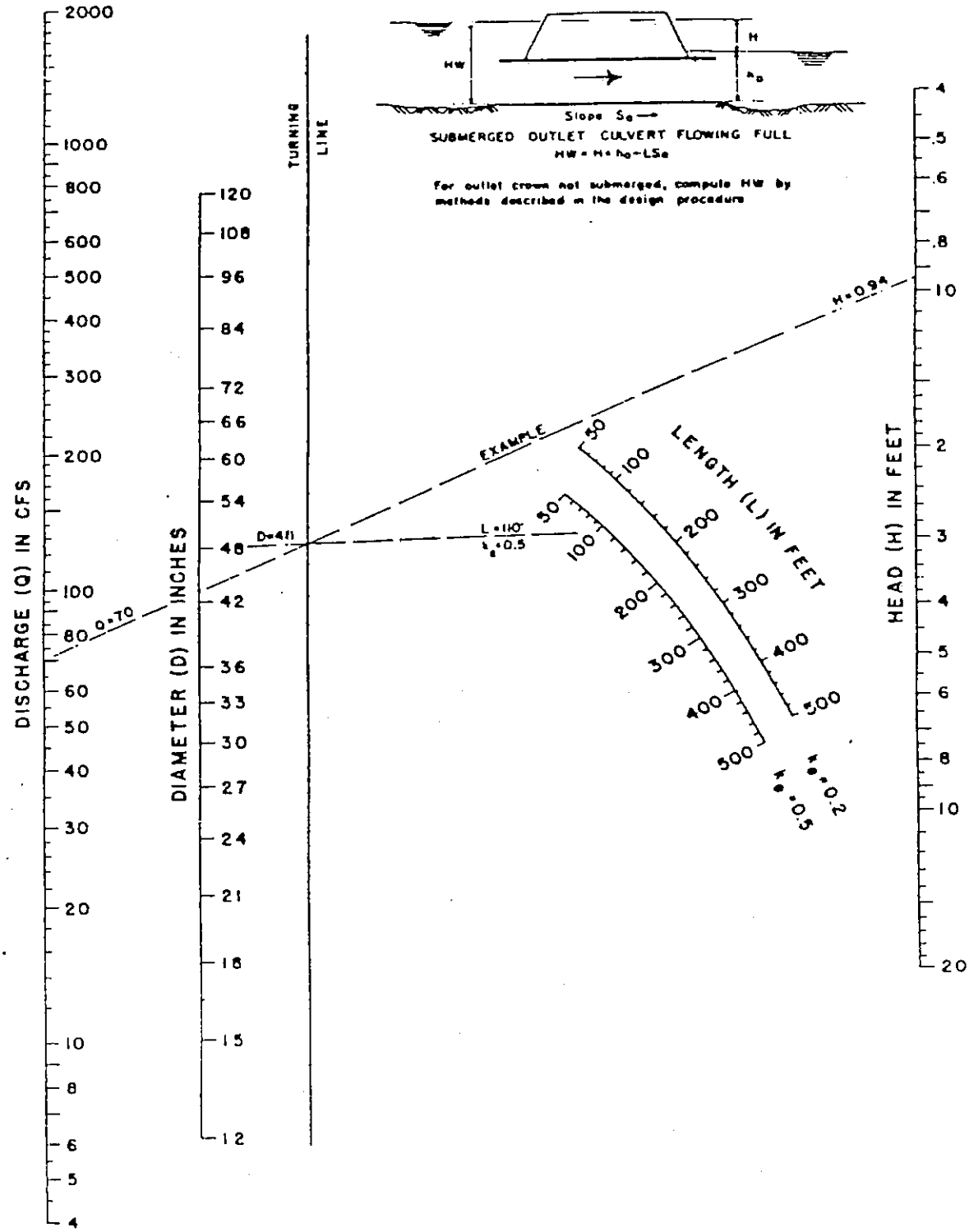

HEAD FOR
CONCRETE PIPE CULVERTS
FLOWING FULL
n = 0.012

BUREAU OF PUBLIC ROADS JAN 1963

FIG 7-8

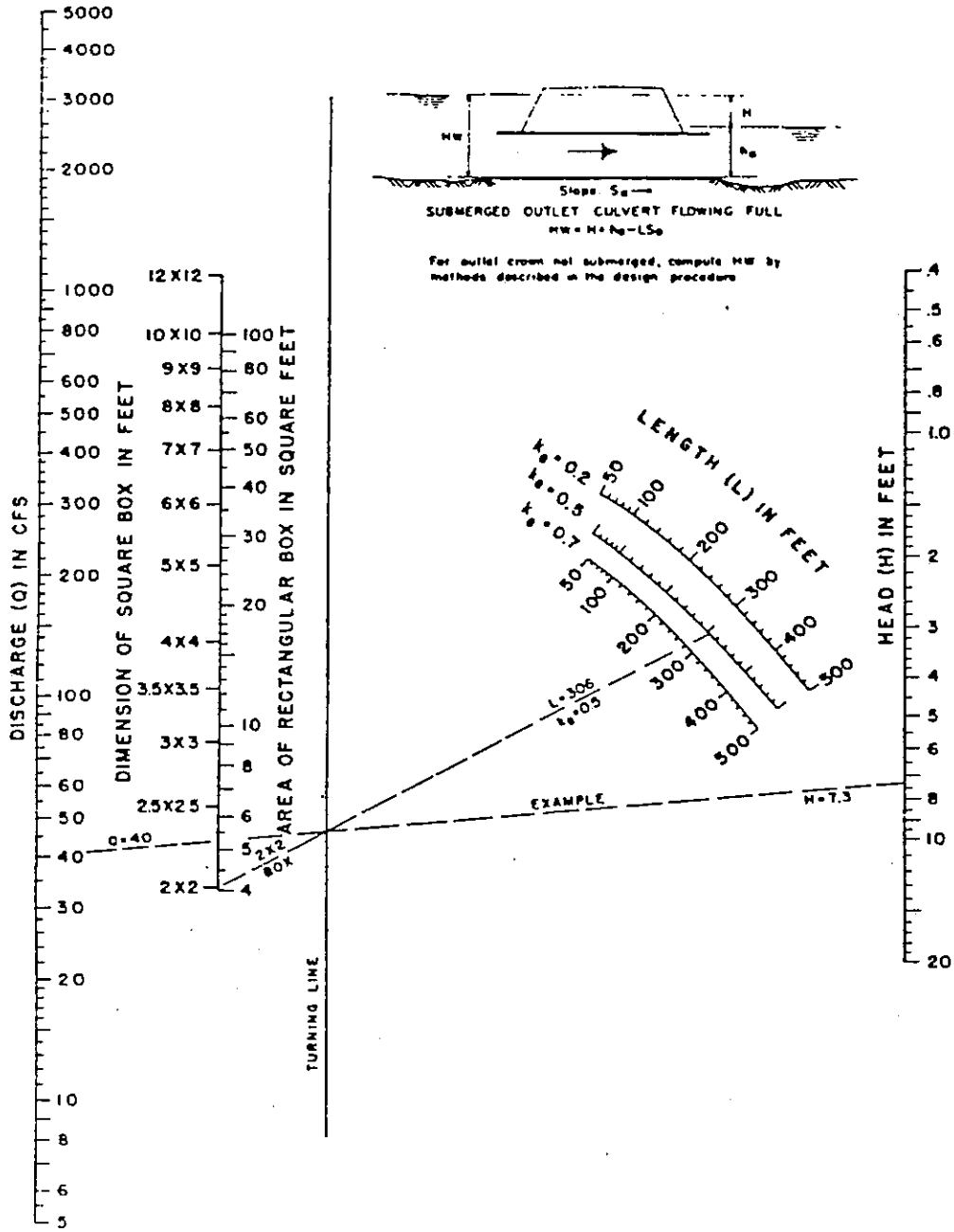

HEAD FOR
CONCRETE BOX CULVERTS
FLOWING FULL
n = 0.012

BUREAU OF PUBLIC ROADS JAN. 1963

FIG. 7-9

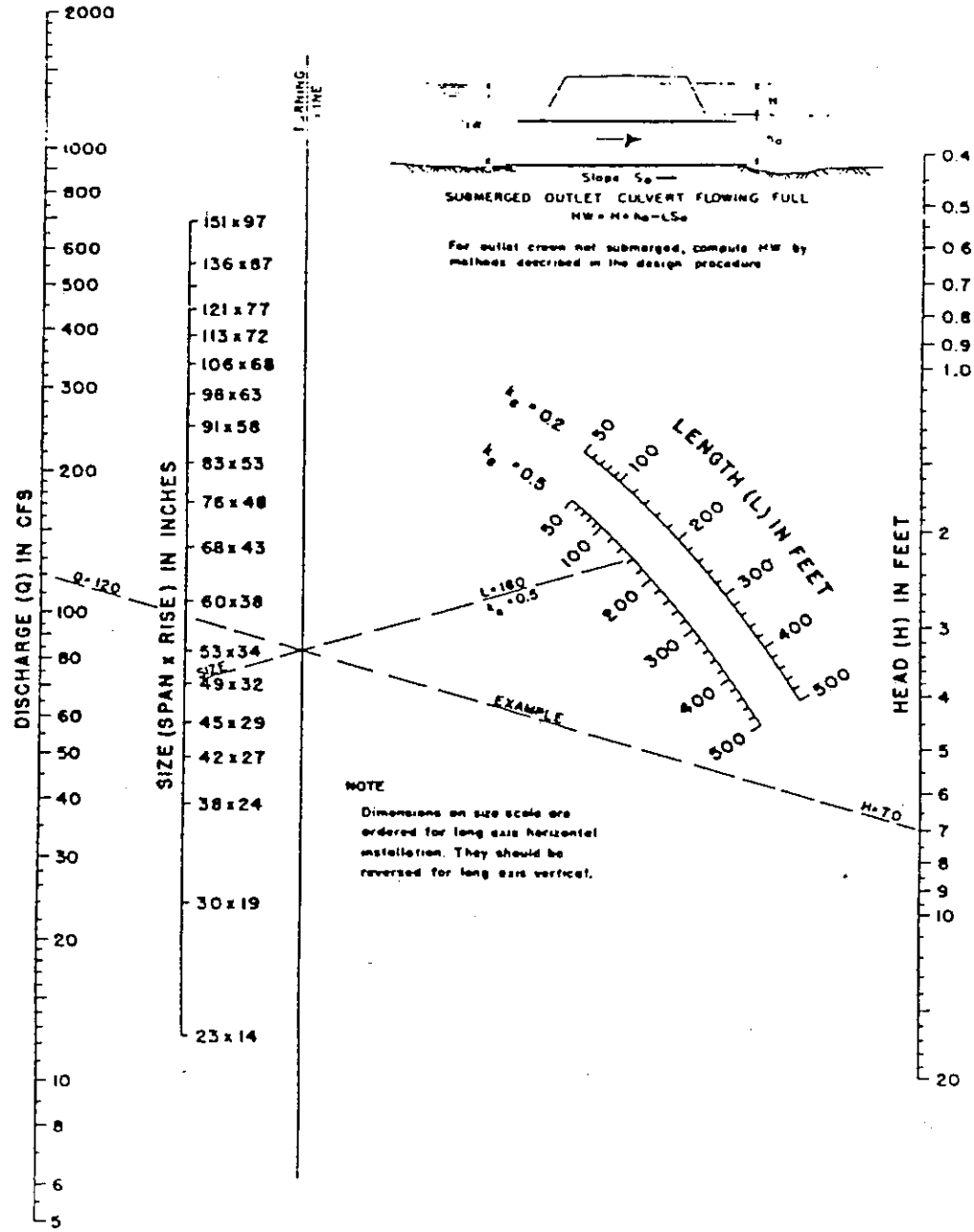

HEAD FOR
OVAL CONCRETE PIPE CULVERTS
LONG AXIS HORIZONTAL OR VERTICAL
FLOWING FULL
n = 0.012

BUREAU OF PUBLIC ROADS JAN. 1963

FIG. 7-10

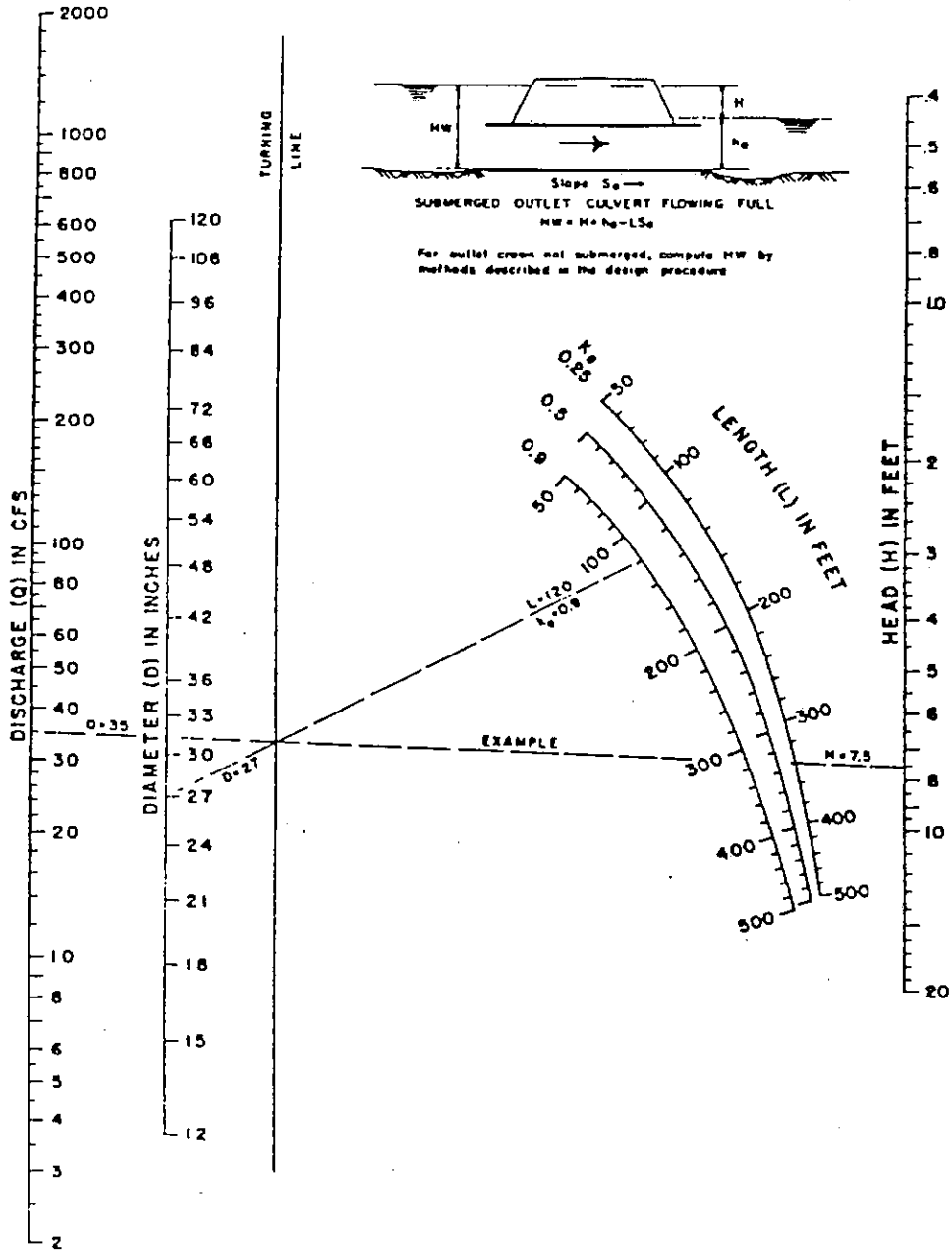

HEAD FOR
STANDARD
C. M. PIPE CULVERTS
FLOWING FULL
n = 0.024

BUREAU OF PUBLIC ROADS JAN 1963

FIG. 7-11

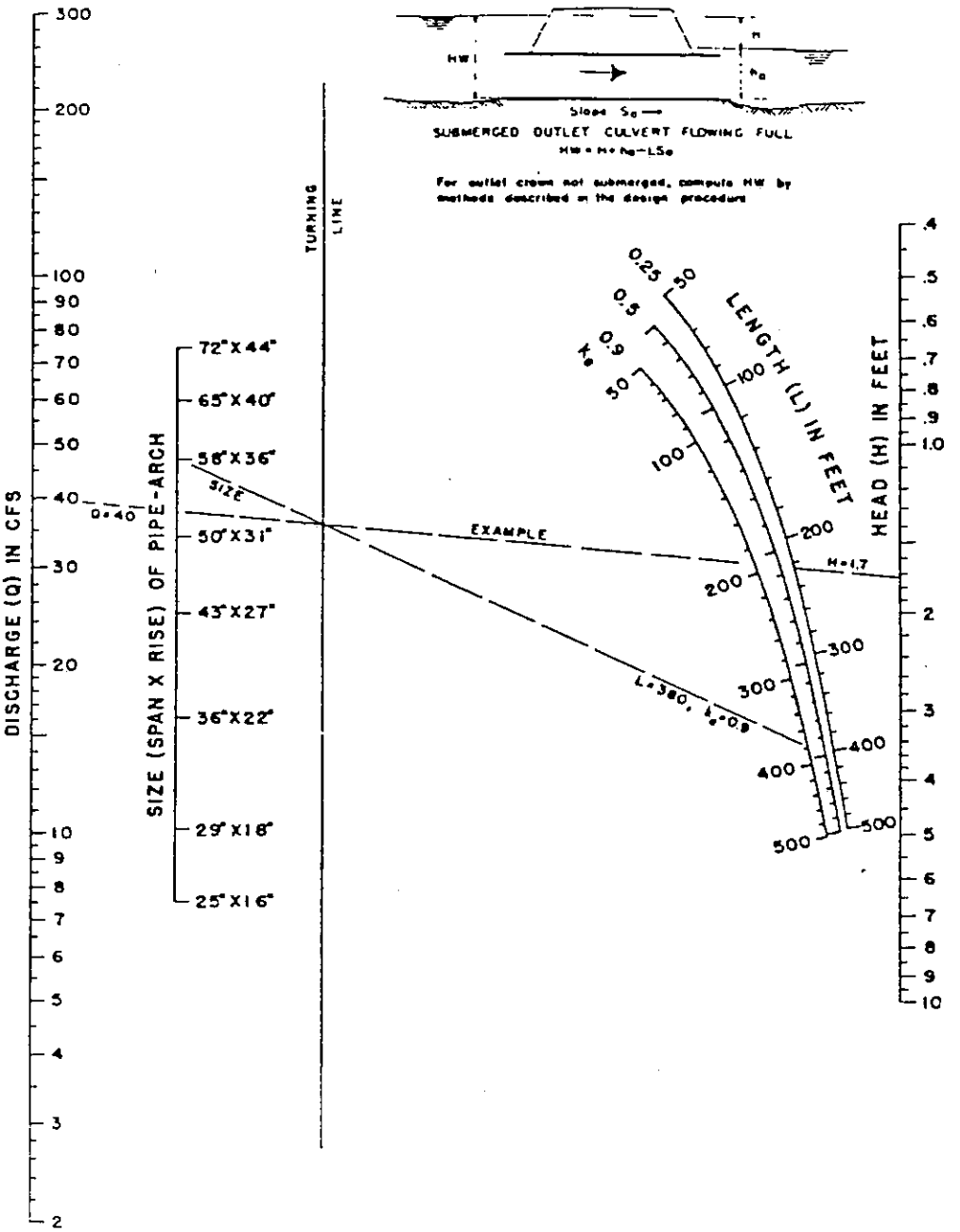

HEAD FOR
STANDARD C. M. PIPE-ARCH CULVERTS
FLOWING FULL
n=0.024

BUREAU OF PUBLIC ROADS JAN 1963

FIG. 7-12

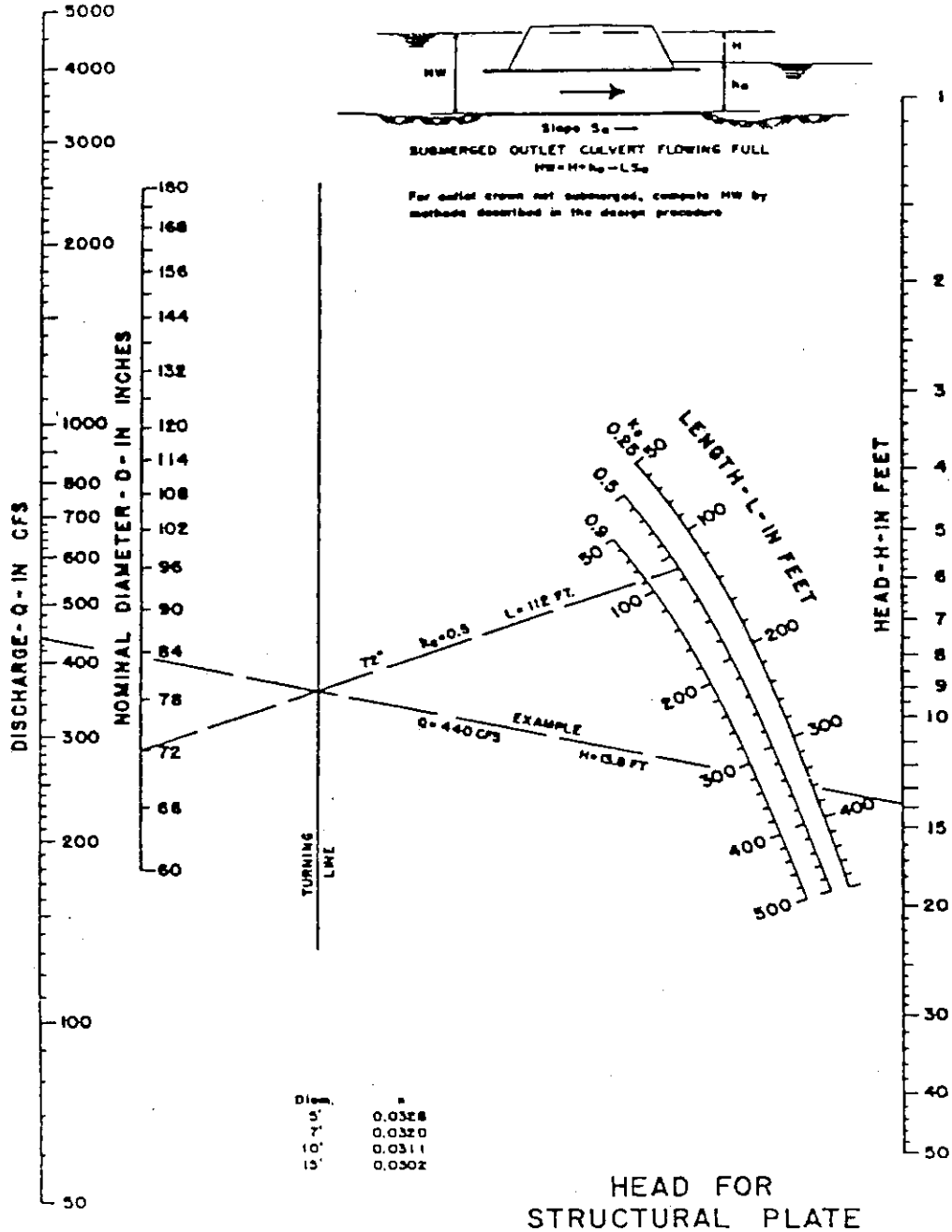

HEAD FOR
STRUCTURAL PLATE
CORR. METAL PIPE CULVERTS
FLOWING FULL
n = 0.0328 TO 0.0302

BUREAU OF PUBLIC ROADS JAN 1963

FIG. 7-13

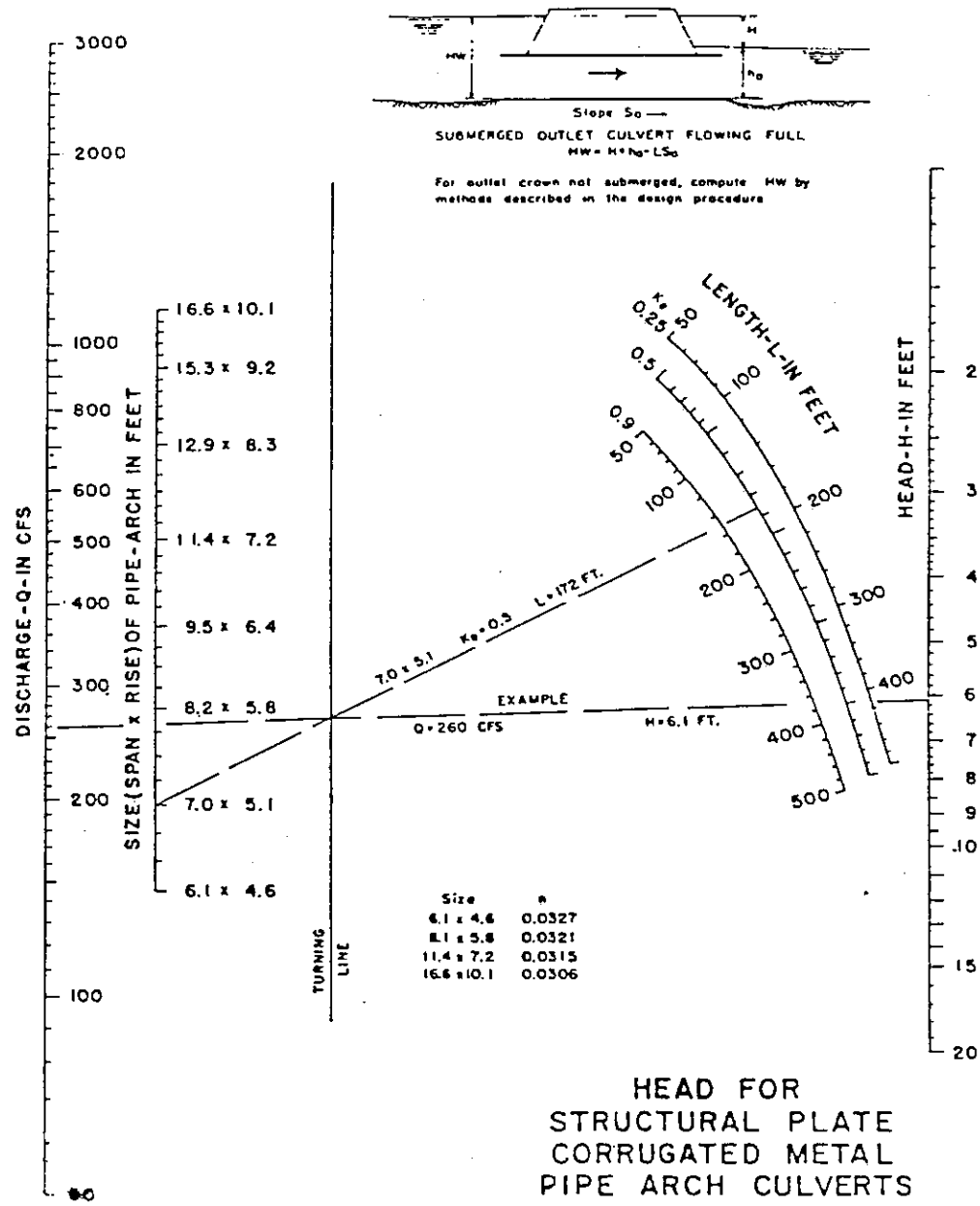

HEAD FOR STRUCTURAL PLATE CORRUGATED METAL PIPE ARCH CULVERTS 18 IN. CORNER RADIUS FLOWING FULL n = 0.0327 TO 0.0306

BUREAU OF PUBLIC ROADS JAN. 1963

FIG. 7-14

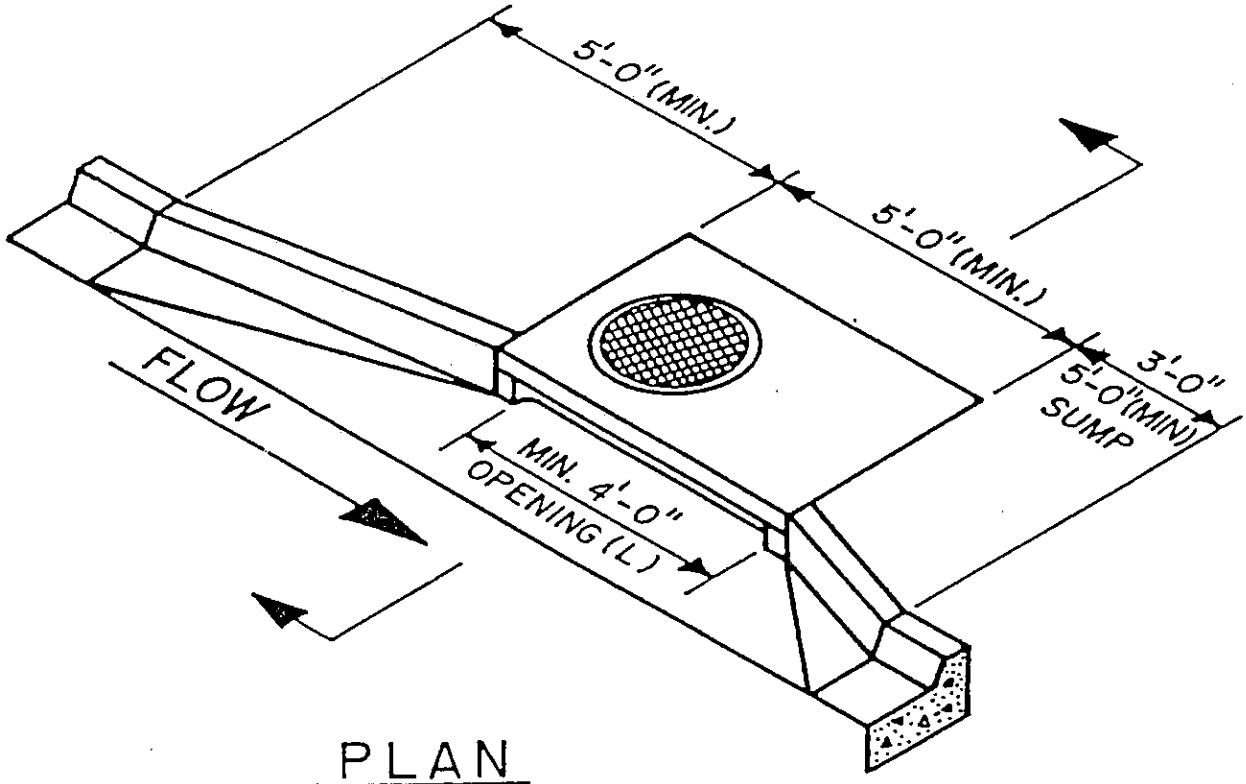

PLAN

NO SCALE

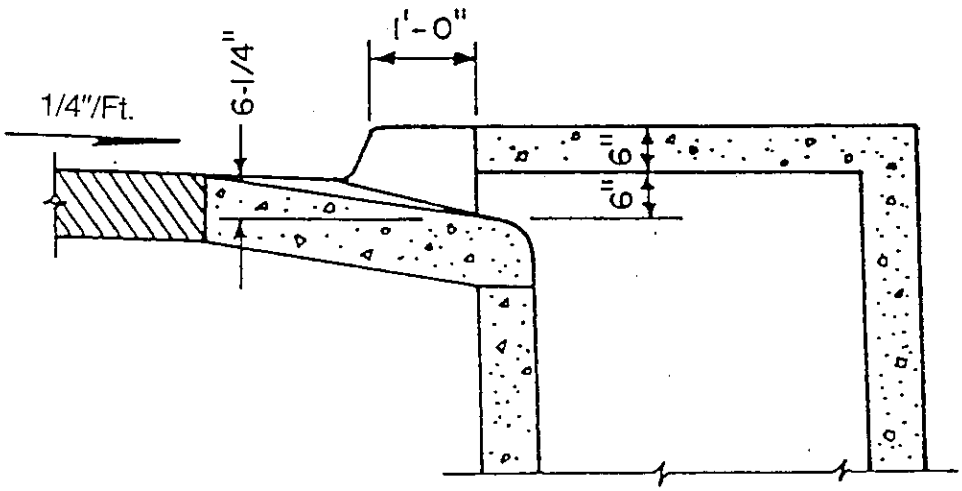

SECTION

NO SCALE

FIGURE
8-0

CURB INLETS

MINIMUM HYDRAULIC DIMENSIONS

TABLE 8-1
CURB INLET CAPACITY
FOR
12.0-FOOT GUTTER SPREAD

GUTTER SLOPE IN PERCENT	GUTTER CAPACITY C.F.S.	CURB INLET DESIGN CAPACITY C.F.S. FOR INLET LENGTH						
		4 FOOT	5 FOOT	6 FOOT	8 FOOT	10 FOOT	11 FOOT	12 FOOT
0.5	2.7	G	G	G	G	G	G	G
1	3.7	G	G	G	G	G	G	G
2	5.3	5.3	G	G	G	G	G	G
3	6.5	5.4	5.6	5.7	G	G	G	G
4	7.5	5.4	5.9	6.0	6.8	7.1	7.3	7.4
6	9.1	5.6	6.4	6.5	7.4	8.1	8.5	8.9
8	10.6	5.7	6.8	6.9	8.0	9.0	9.4	9.8
10	11.8	6.4	7.2	7.9	9.1	10.1	10.6	11.1
12	12.9	7.1	7.9	8.6	10.0	11.2	11.7	12.2
14	14.0	7.6	8.6	9.4	10.8	12.1	12.7	13.2

NOTES & REFERENCES:

1. Inlet capacities derived from "The Design of Stormwater Inlets" Johns Hopkins University, 1956

2. Gutter capacity calculated by Izzard's Equation

3. Inlet capacity is for ¼" per foot street crown and inlet throat and transition geometry per Figure 8-0

4. Gutter deflectors are required for inlets on slopes of 4 percent and steeper.

5. Linear interpolation within the range of the table is permitted for slopes and corresponding capacities not shown.

6. Reduce above theoretical capacities by 20% for clogging allowance per Section 5603.1.B.

7. "G" indicates inlet capacity is greater than gutter capacity and the 20% capacity reduction is not required.

TABLE 8-3
CURB INLET CAPACITY
FOR
10.5-FOOT GUTTER SPREAD

GUTTER SLOPE IN PERCENT	GUTTER CAPACITY C.F.S.	CURB INLET DESIGN CAPACITY C.F.S. FOR INLET LENGTH						
		4 FOOT	5 FOOT	6 FOOT	8 FOOT	10 FOOT	11 FOOT	12 FOOT
0.5	1.8	G	G	G	G	G	G	G
1	2.6	G	G	G	G	G	G	G
2	3.7	G	G	G	G	G	G	G
3	4.5	G	G	G	G	G	G	G
4	5.1	4.6	4.8	5.1	G	G	G	G
6	6.3	4.9	5.3	5.7	6.3	7.2	G	G
8	7.3	5.1	5.7	6.3	7.2	G	G	G
10	8.2	5.9	6.6	7.2	8.1	G	G	G
12	8.9	6.3	7.1	7.8	8.9	G	G	G
14	9.6	6.9	7.7	8.4	9.6	G	G	G

NOTES & REFERENCES:

1. Inlet capacities derived from "The Design of Stormwater Inlets" Johns Hopkins University, 1956

2. Gutter capacity calculated by Izzard's Equation

3. Inlet capacity is for ¼" per foot street crown and inlet throat and transition geometry per Figure 8-0

4. Gutter deflectors are required for inlets on slopes of 4 percent and steeper.

5. Linear interpolation within the range of the table is permitted for slopes and corresponding capacities not shown.

6. Reduce above theoretical capacities by 20% for clogging allowance per Section 5603.1.B.

7. "G" indicates inlet capacity is greater than gutter capacity and the 20% capacity reduction is not required.

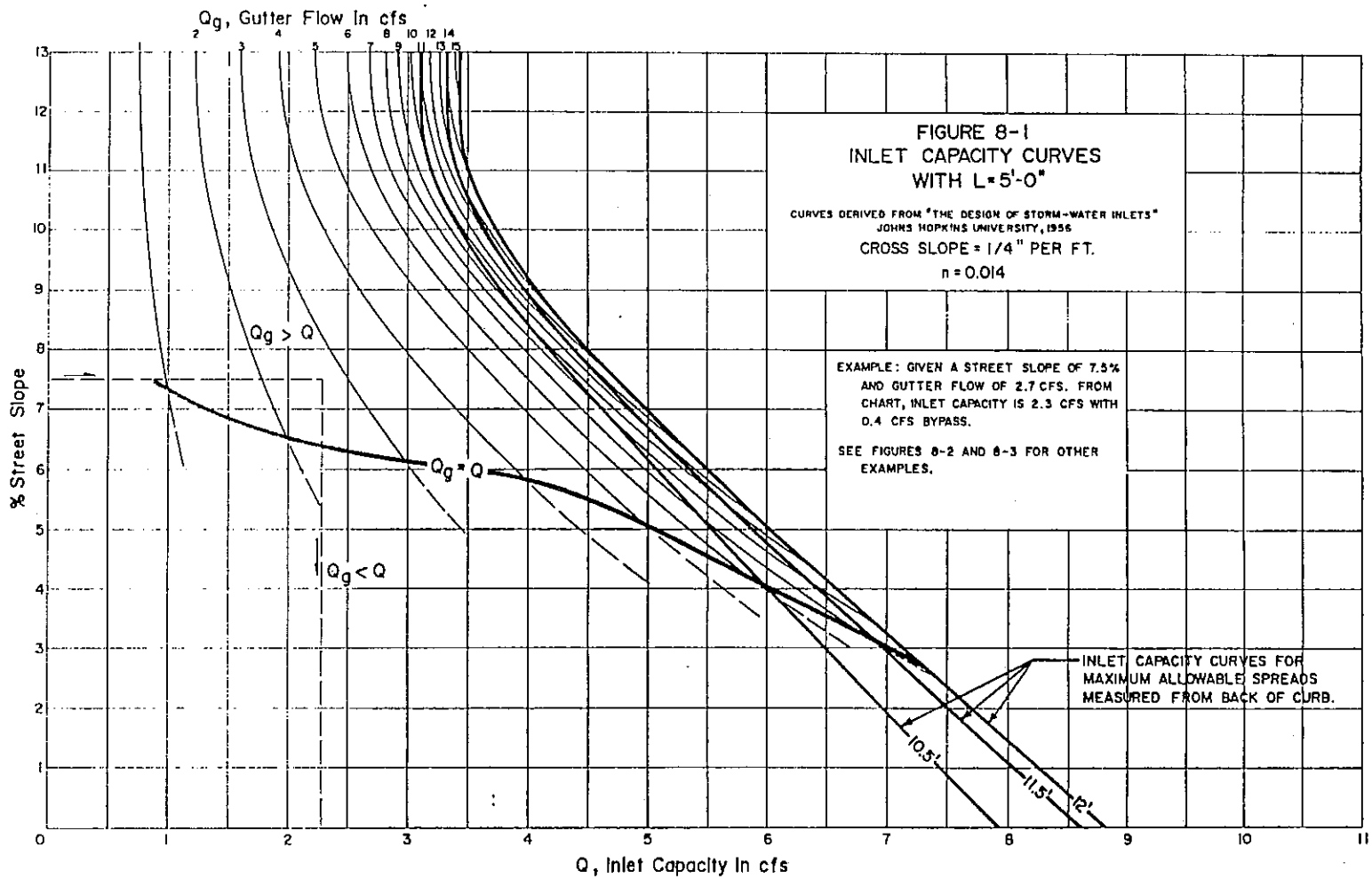

Reduce above theoretical capacities by 20% for clogging allowance per Section 5603.1.B.

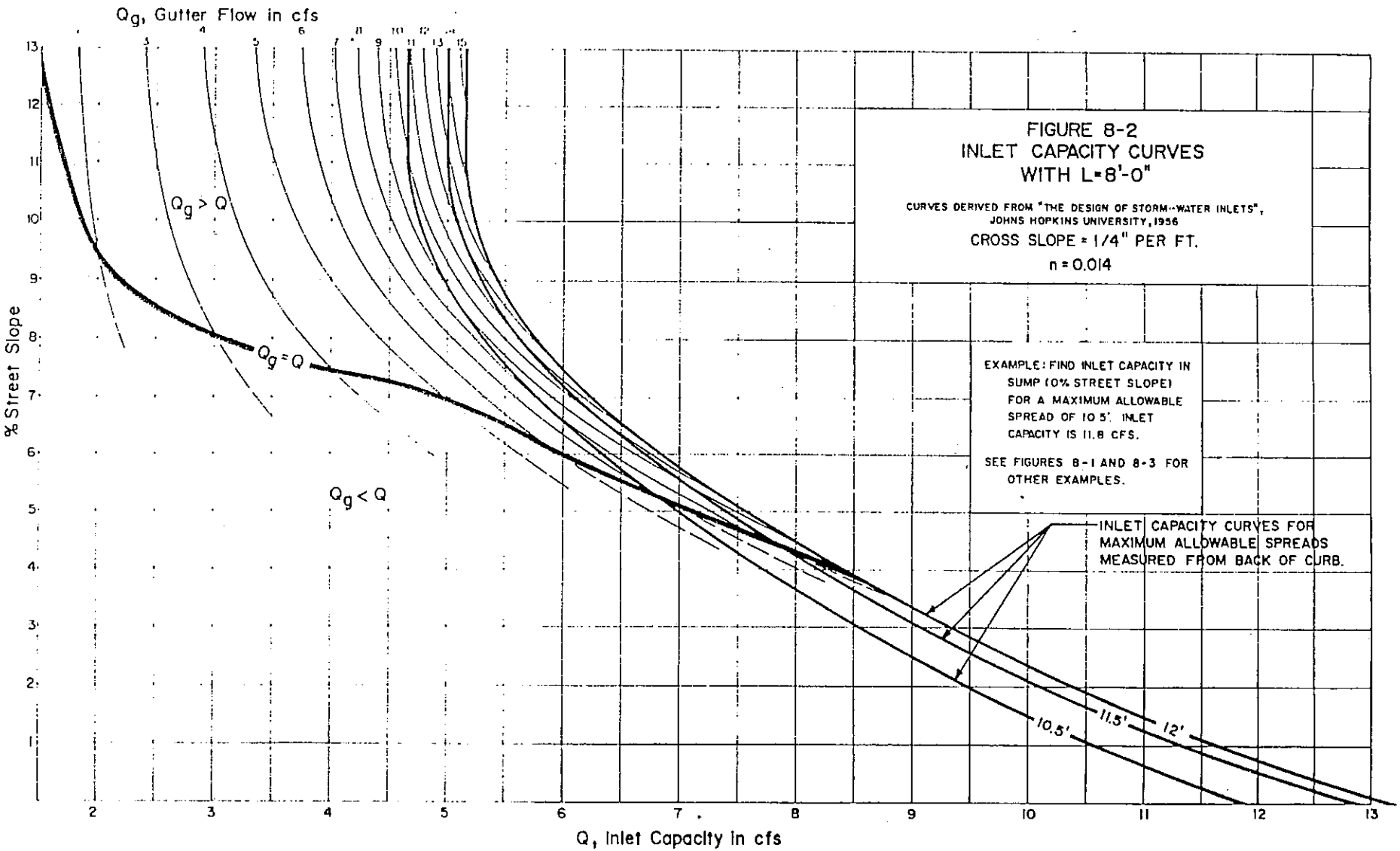

Reduce above theoretical capacities by 20% for clogging allowance per Section 5603.1.B.

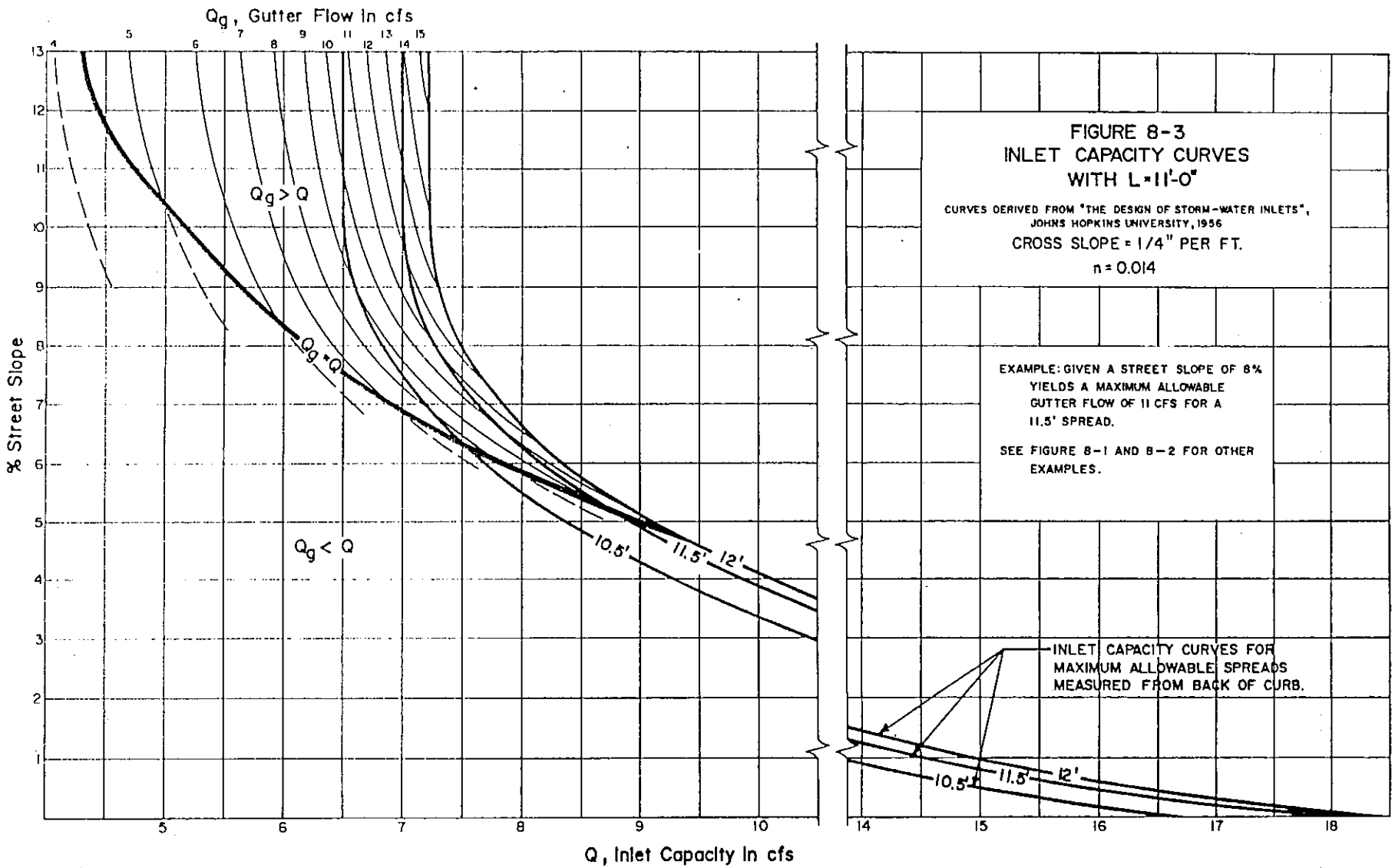

Reduce above theoretical capacities by 20% for clogging allowance per Sectio 03.1.B.

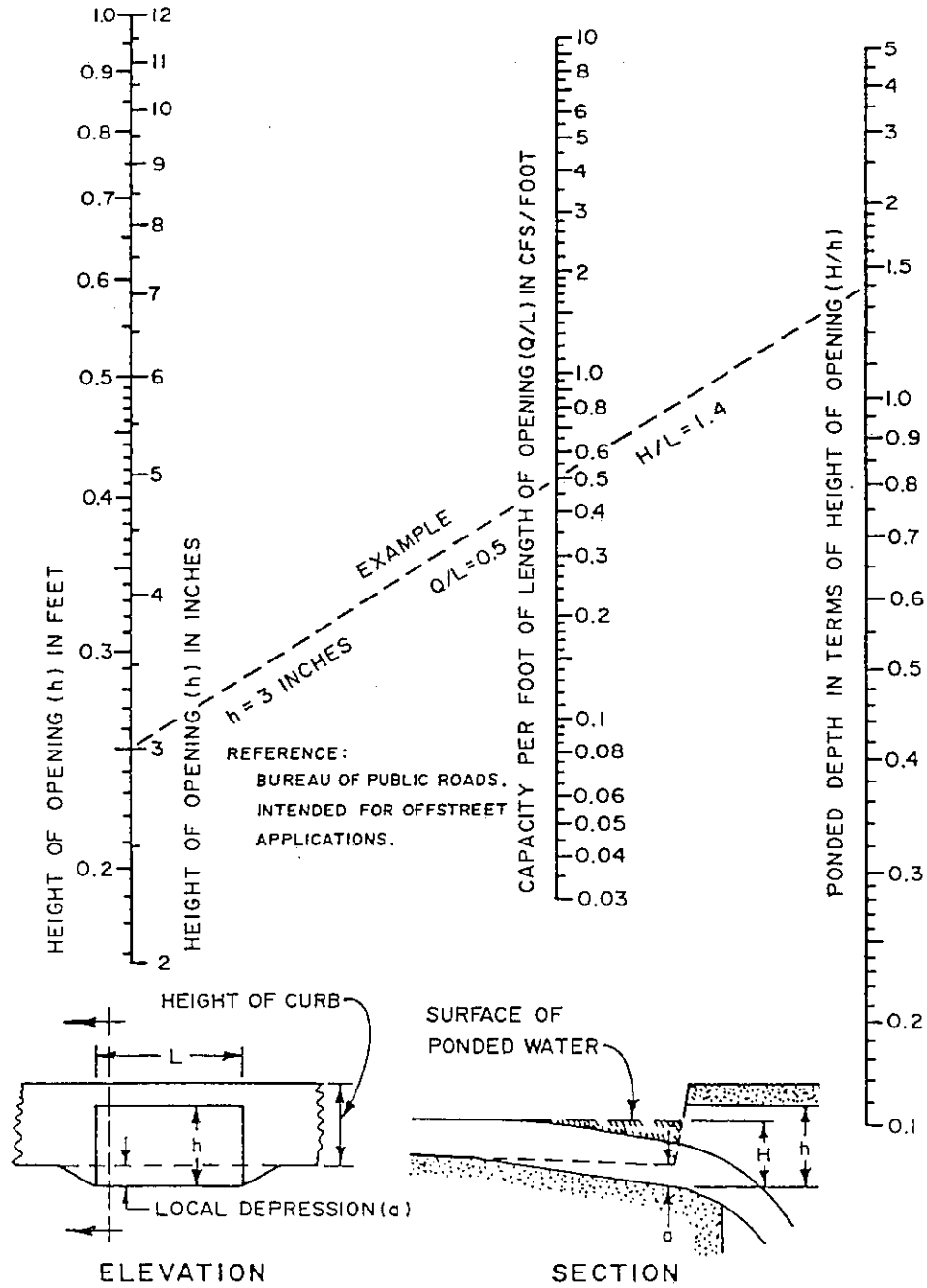

CAPACITY OF CURB OPENING INLET AT LOW POINT IN GRADE.

FIGURE 8-4

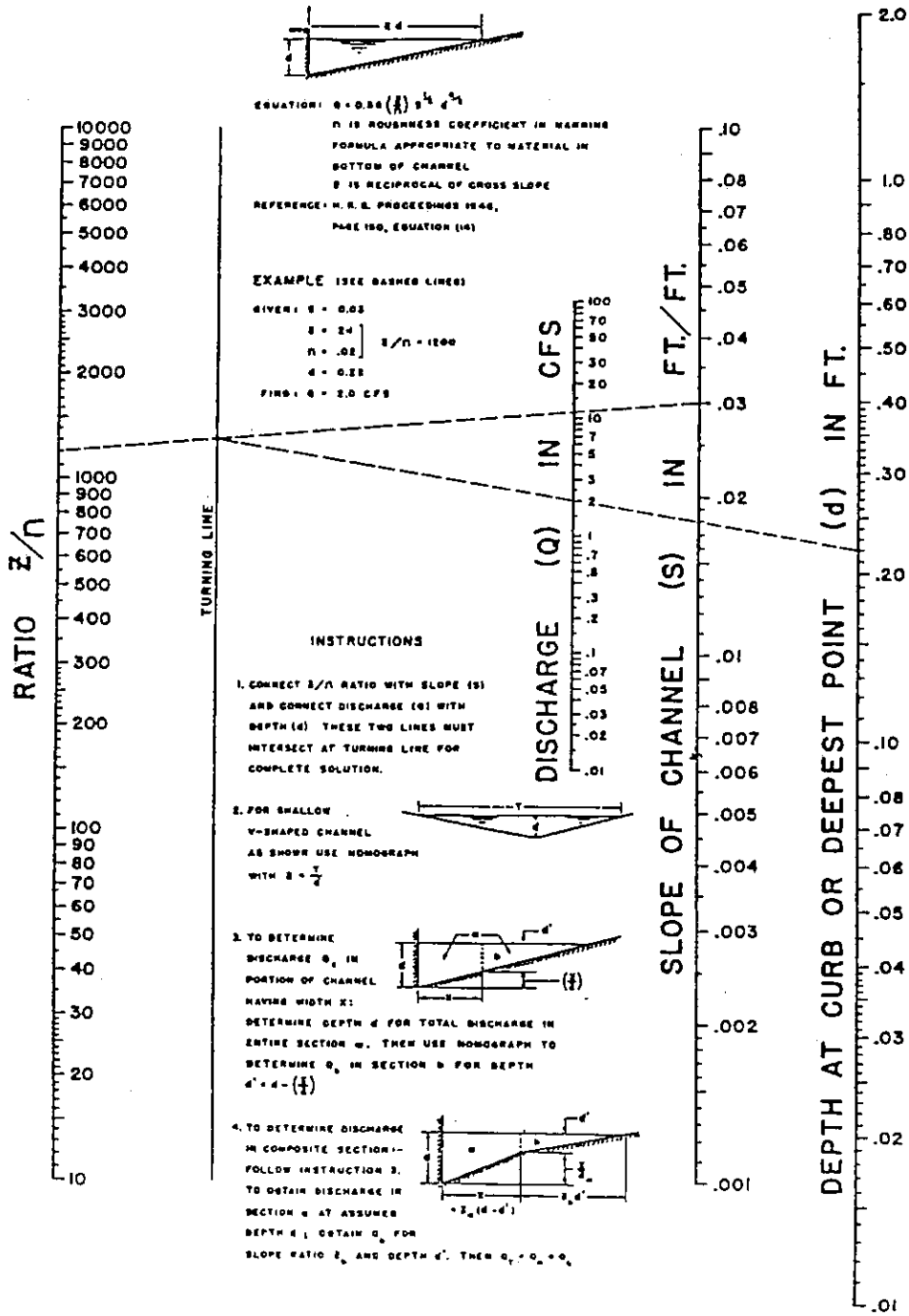

REFERENCE
FEDERAL HIGHWAY ADMINISTRATION 1979

NOMOGRAPH FOR FLOW IN TRIANGULAR CHANNELS

FIG. 9

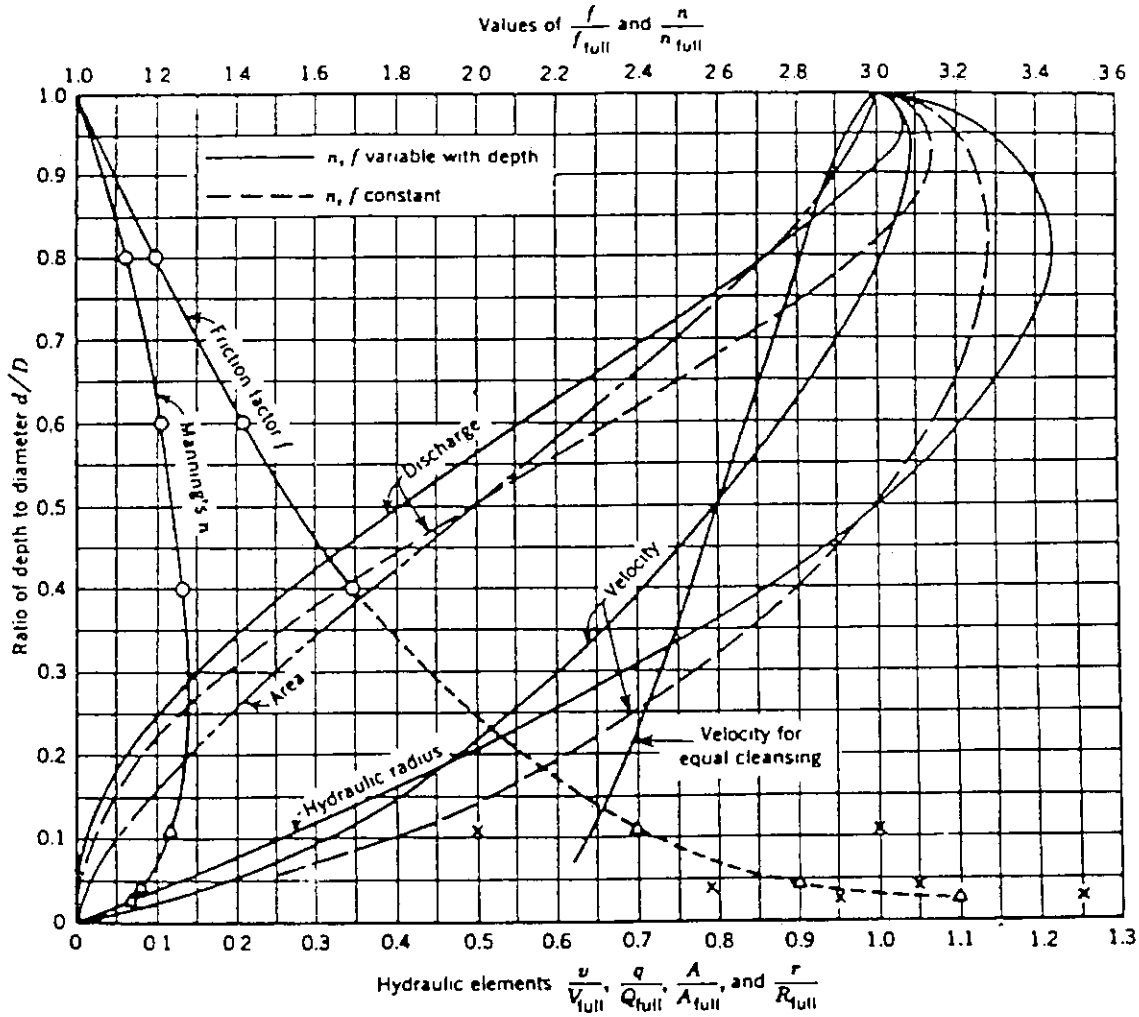

v	= Actual velocity of flow (fps)	A	= Area occupied by flow (ft.^{2})
V_{full}	= Velocity flowing full (fps)	A_{full}	= Area of pipe (ft.^{2})
q	= Actual quantity of flow (cfs)	r	= Actual hydraulic radius (ft.)
Q_{full}	= Capacity flowing full (cfs)	R_{full}	= Hydraulic radius of full pipe (ft.)

HYDRAULIC ELEMENTS OF CIRCULAR CONDUITS (2)

FIG. 10

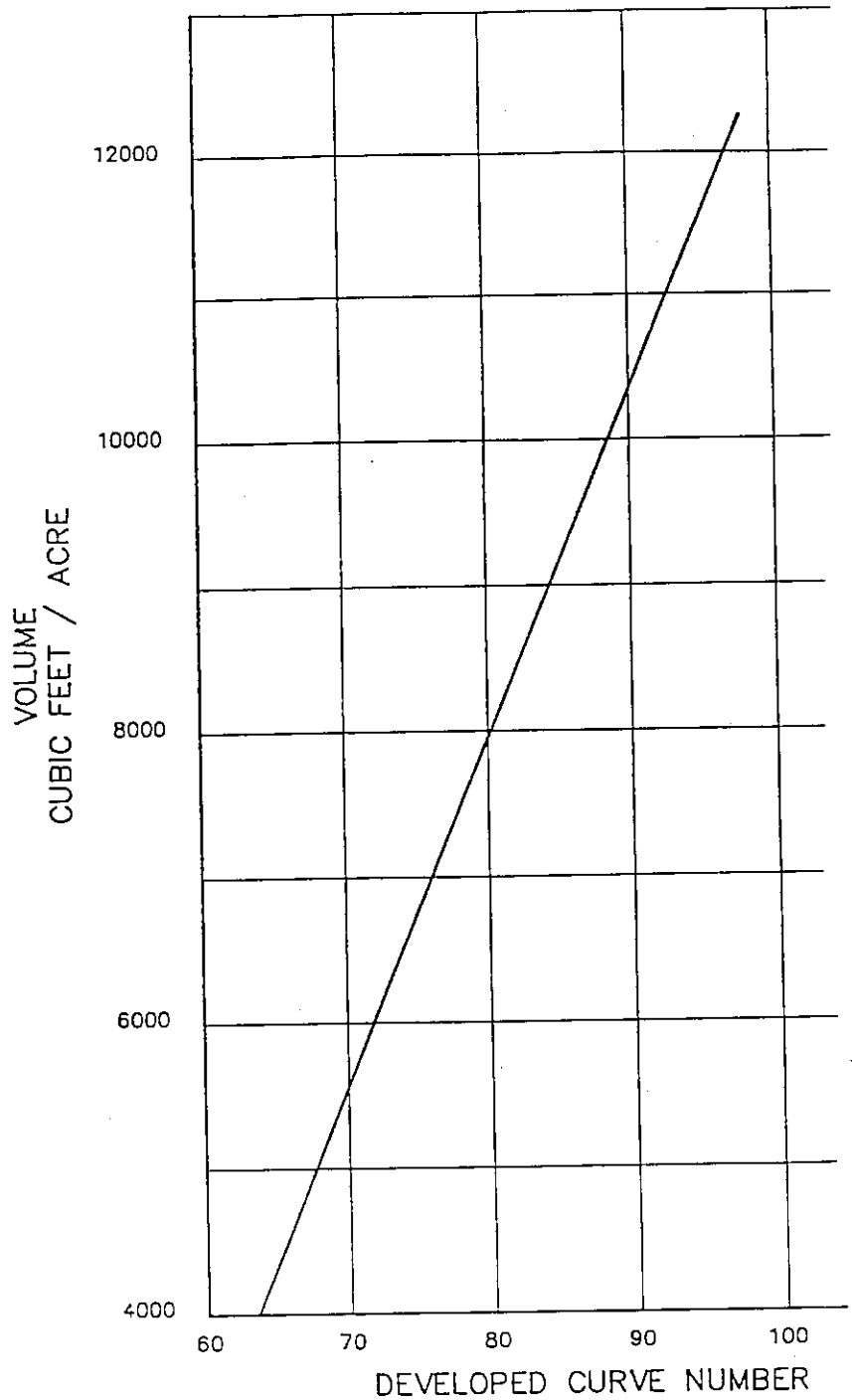

STORM WATER DETENTION
VOLUME REQUIREMENT
(SIMPLIFIED OPTION)

NOTES:

1. For Release Rates - See Section 5606.4.B.

2. The developed curve number for the site is to be determined in accordance with TR-55 "Urban Hydrology for Small Watersheds.

SIMPLIFIED VOLUME CHART
FOR DETENTION FACILITIES

FIG. 11

NOTES:

1. Use KDOT Class "A" Concrete (AE) throughout.
2. The First Dimension listed in the Construction Notes is the "L" Dimension. The Second Dimension is the "W" Dimension.
3. Floor of Inlet shall be shaped with Non-Reinforced Class "A" Concrete (AE) Invert to provide Smooth Flow
4. Expansion Joints shall be either Hot or Cold Poured Joint Sealing Compound, or Premolded Expansion Joint Filler.
5. Steel Inlet Frame Spacers shall be placed at Equal Spacings not to exceed 4'-0".
6. Cast Iron Steps shall be spaced at 1'-4" O.C. Vertically
7. Bevel all Exposed Edges with 3/4" Triangular Molding.
8. On-Grade Inlets shall conform to the Street Grade and Sump Inlets shall be Level.
9. 8" Solid Concrete Block or Brick may be used in Walls in Lieu of Poured Concrete where neither "H"+"L" nor "H"+"W" (in Feet) Exceed Fourteen. Block or Brick may be used in any Box where "H" is 5' or less.
10. All Crushed Stone used as Aggregate for Concrete Construction shall be obtained from Quarries and Beds designated by the Kansas Department of Transportation as meeting Durability Requirements of Class 1 or Class 6.

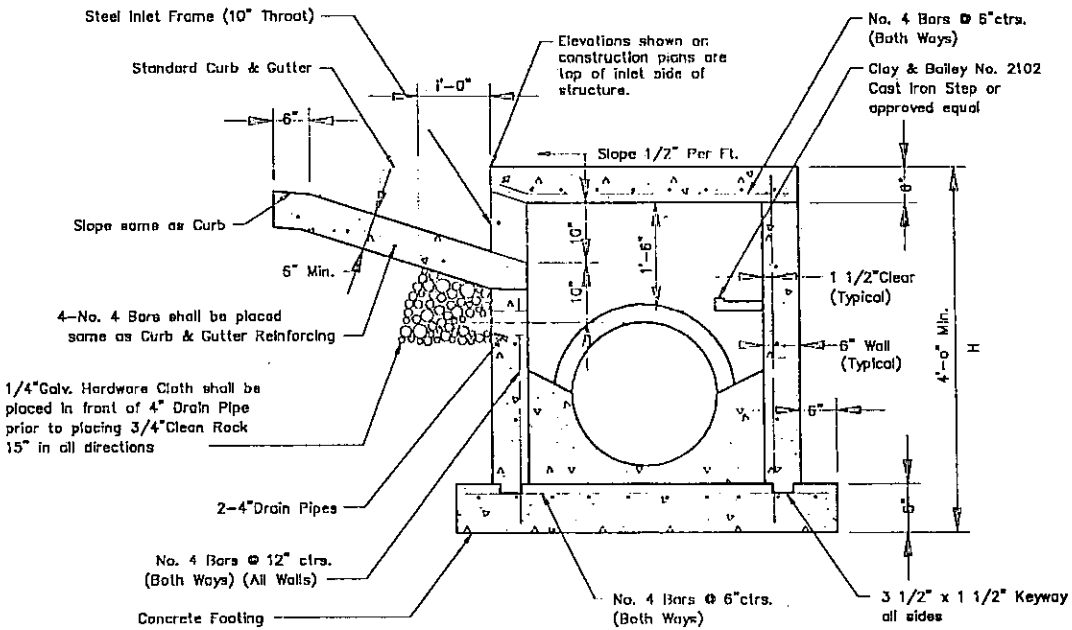

SECTION A-A

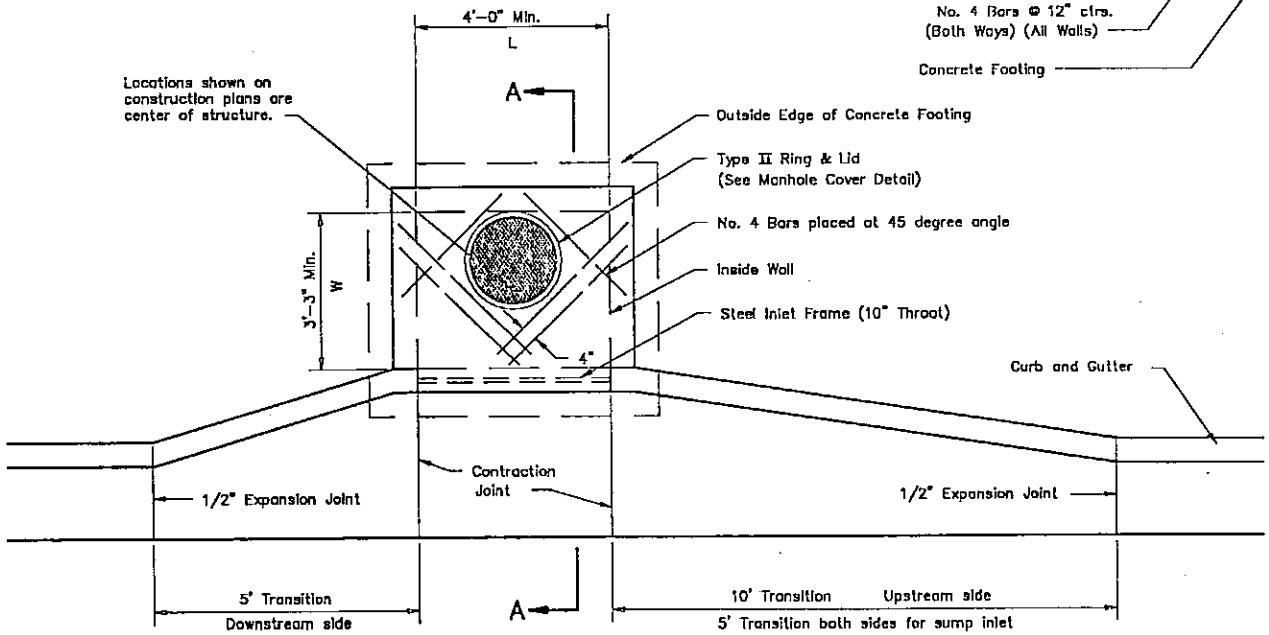

PLAN

STANDARD CURB INLET

BALDWIN CITY, KANSAS	
STANDARD CURB INLET	
DATE: 4-7-94	SH. OF
DRAWN:	APPVD: RAW

NOTES:

1. Use KDOT Class "A" Concrete (AE) throughout.
2. The First Dimension listed in the Construction Notes is the "L" Dimension. The Second Dimension is the "W" Dimension.
3. Floor of Inlet shall be shaped with Non-Reinforced Class "A" Concrete (AE) Invert to provide Smooth Flow .
4. Steel Inlet Frame Spacers shall be placed at Equal Spacings not to exceed 4'-0".
5. Cast Iron Steps shall be spaced at 1'-4" O.C. Vertically
6. Bevel all Exposed Edges with 3/4" Triangular Moulding.
7. 8" Solid Concrete Block or Brick may be used in Walls in Lieu of Poured Concrete where neither "H"+"L" nor "H"+"W" (in Feet) Exceed Fourteen. Block or Brick may be used in any Box where "H" is 5' or less.
8. All Crushed Stone used as Aggregate for Concrete Construction shall be obtained from Quarries and Beds designated by the Kansas Department of Transportation as meeting Durability Requirements of Class 1 or Class 6.
9. Grade Around Inlet should Impound Water. A Minimum of 6" above Inlet Top.

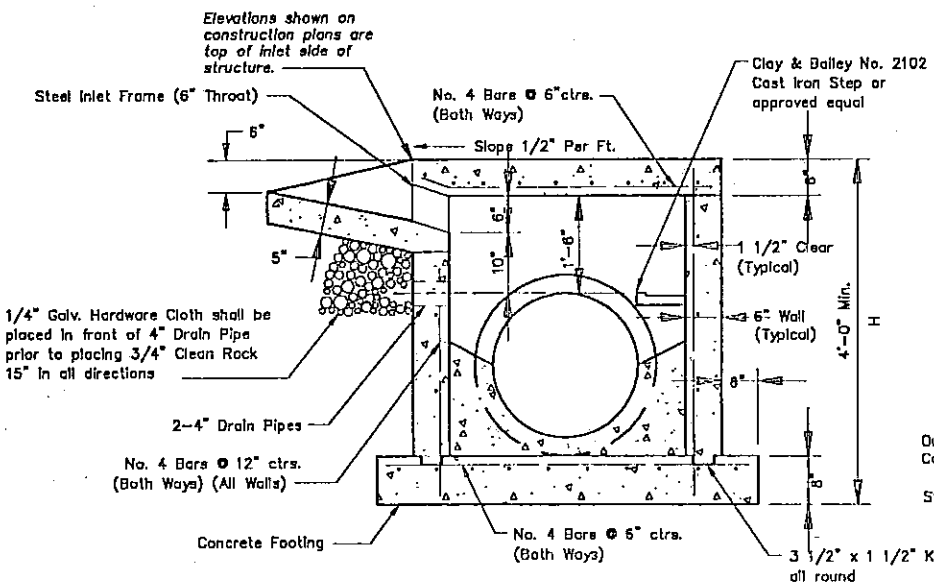

SECTION A-A

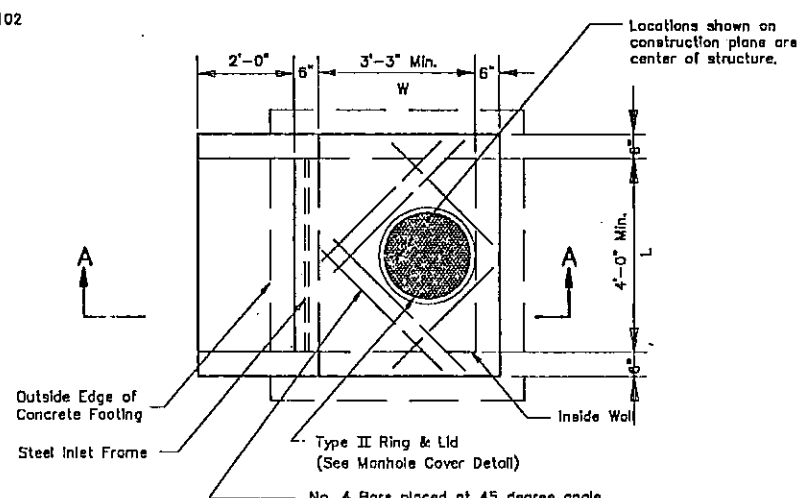

PLAN

AREA INLET

BALDWIN CITY, KANSAS	
AREA INLET	
DATE: 4-7-94	SH. OF
DRAWN:	APPVD: RAW

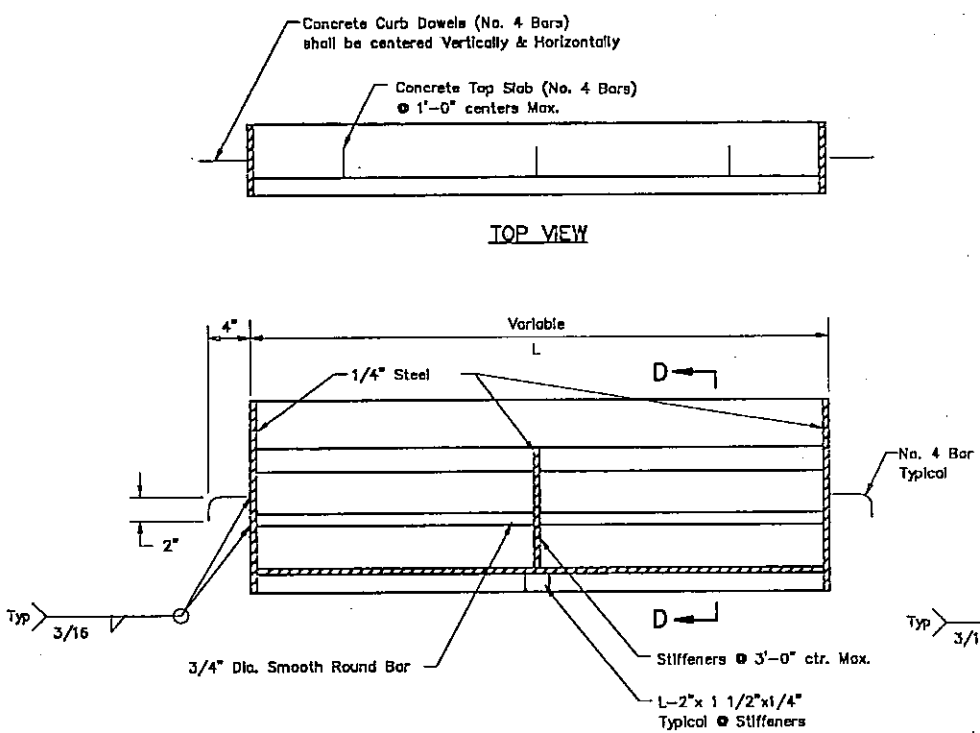

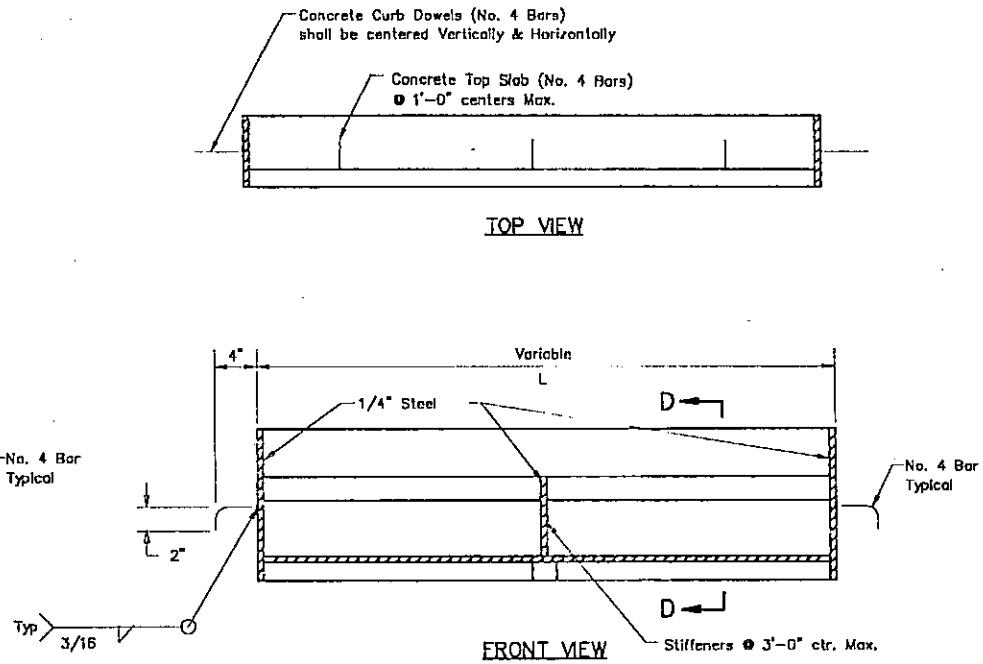

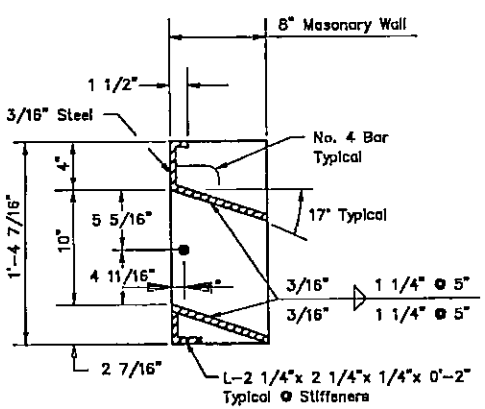

SECTION D-D (8" WALL)

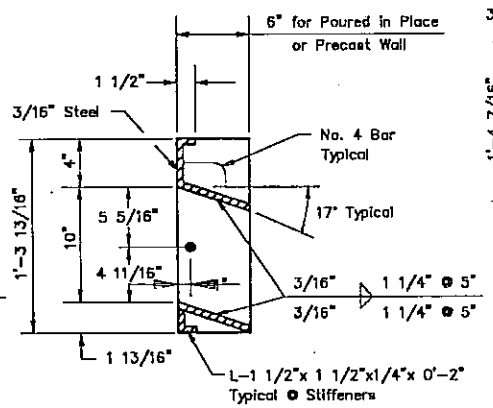

SECTION D-D (6" WALL)

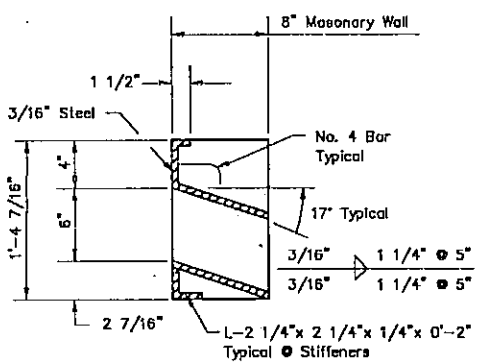

SECTION D-D (8" WALL)

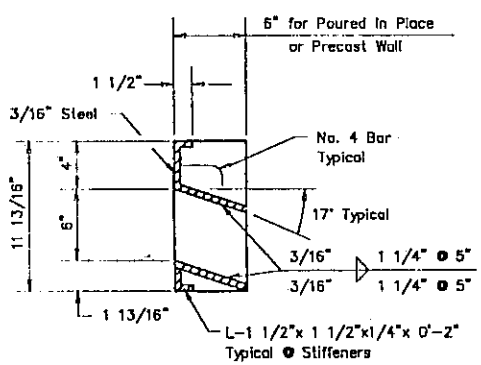

SECTION D-D (6" WALL)

STEEL INLET FRAME (6" THROAT)
(AREA INLET)

STEEL INLET FRAME (10" THROAT)
(CURB INLET)

Notes:
1. All Welds shall be performed in accordance with appropriate AWS Specifications & Procedures.
2. All Welds on Exposed Surfaces shall be dressed so as to provide a pleasing finished appearance.
3. The Entire Frame shall be Painted a single coat of CHEM-PRIME #37-77 Primer (Red) or Equal.

BALDWIN CITY, KANSAS

STEEL INLET FRAME

DATE: 4-7-94 SH. OF
DRAWN: APPVD: RAW

NOTES:

1. Use KDOT Class "A" Concrete (AE) throughout.
2. Floor of Inlet shall be shaped with Non-Reinforced Class "A" Concrete (AE) Invert to provide Smooth Flow
3. Cast Iron Steps shall be spaced at 1'-4" O.C. Vertically
4. Bevel all Exposed Edges with 3/4" Triangular Moulding.
5. 8" Solid Concrete Block or Brick may be used in Walls in Lieu of Poured Concrete where neither "H"+"L" nor "H"+"W" (in Feet) Exceed Fourteen. Block or Brick may be used in any Box where "H" is 5' or less.
6. All Crushed Stone used as Aggregate for Concrete Construction shall be obtained from Quarries and Beds designated by the Kansas Department of Transportation as meeting Durability Requirements of Class 1 or Class 6.

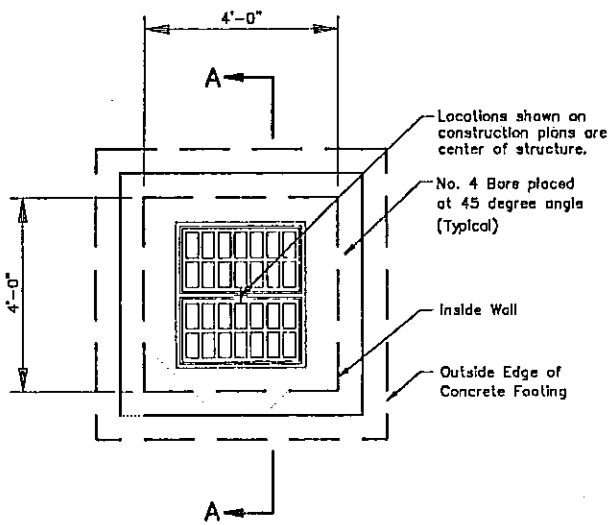

PLAN

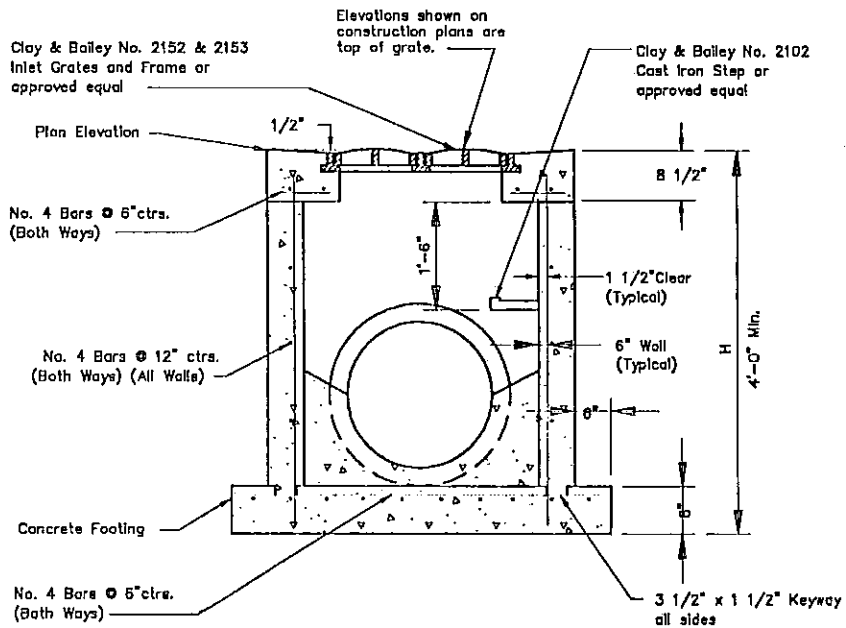

SECTION A-A

GRATE INLET

BALDWIN CITY, KANSAS	
GRATE INLET	
DATE: 4-7-94	SH. OF
DRAWN:	APPVD: RAW

NOTES:

1. Use KDOT Class "A" Concrete (AE) throughout.
2. The First Dimension listed in the Construction Notes is the "L" Dimension. The Second Dimension is the "W" Dimension.
3. Floor of Junction Box shall be shaped with Non-Reinforced Class "A" Concrete (AE) invert to provide Smooth Flow.
4. Cast Iron Steps shall be spaced at 1'-4" O.C. Vertically
5. Bevel all Exposed Edges with 3/4" Triangular Molding.
6. 8" Solid Concrete Block or Brick may be used in Walls in Lieu of Poured Concrete where neither "H"+"L" nor "H"+"W" (in Feet) Exceed Fourteen. Block or Brick may be used in any Box where "H" is 5' or less.
7. All Crushed Stone used as Aggregate for Concrete Construction shall be obtained from Quarries and Beds designated by the Kansas Department of Transportation as meeting Durability Requirements of Class 1 or Class 6.

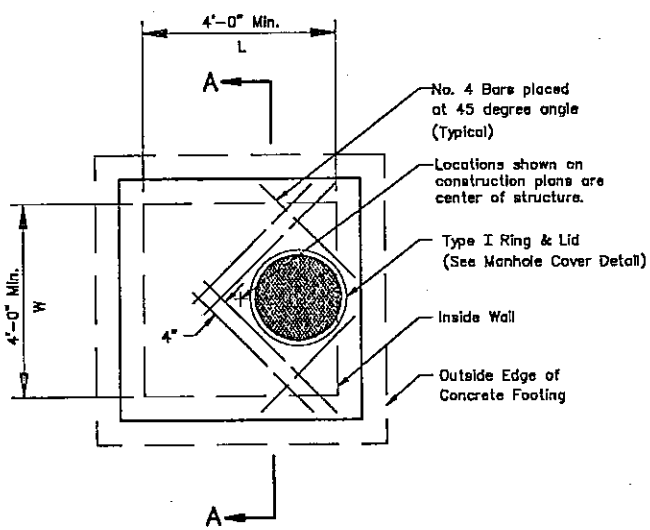

PLAN

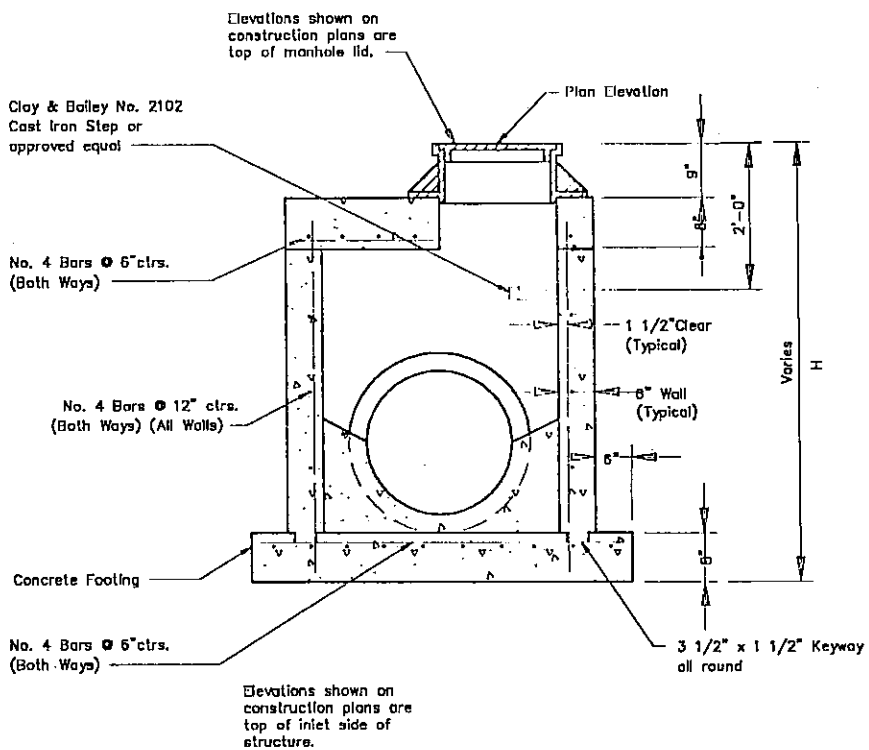

SECTION A-A

JUNCTION BOX

BALDWIN CITY, KANSAS	
JUNCTION BOX	
DATE: 4-7-94	SH. OF
DRAWN:	APPVD: RAW

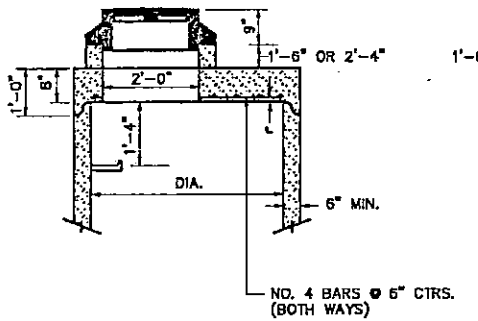

STANDARD PRECAST MANHOLE (SHALLOW TYPE)

TO BE USED ONLY WHEN SPECIFIED IN PLANS

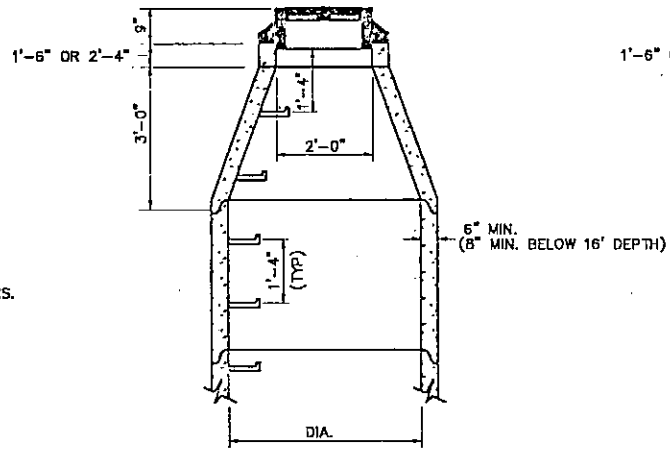

* UNLESS OTHERWISE NOTED ON PLANS

STANDARD PRECAST MANHOLE (CONCENTRIC CONE)

(SHALLOW MANHOLES ONLY)

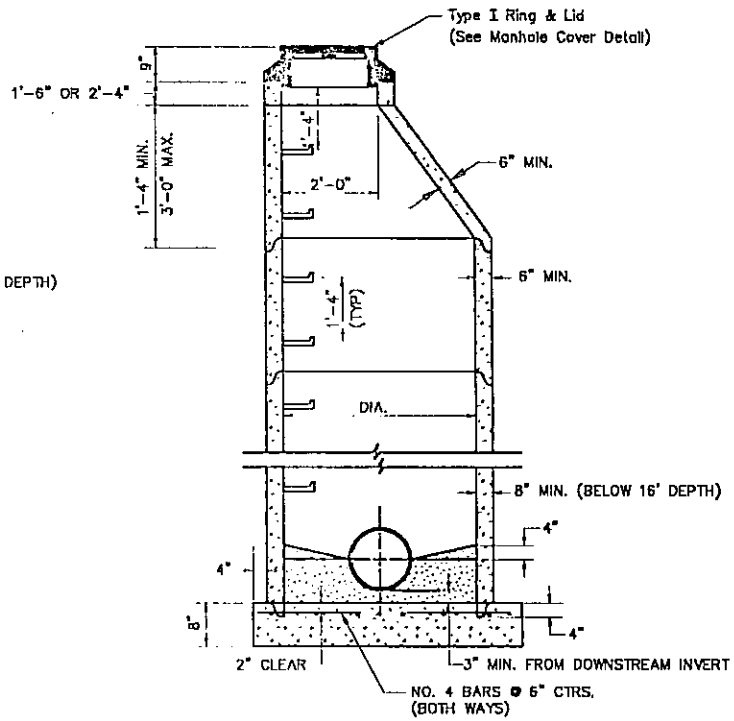

STANDARD PRECAST MANHOLE (ECCENTRIC CONE)

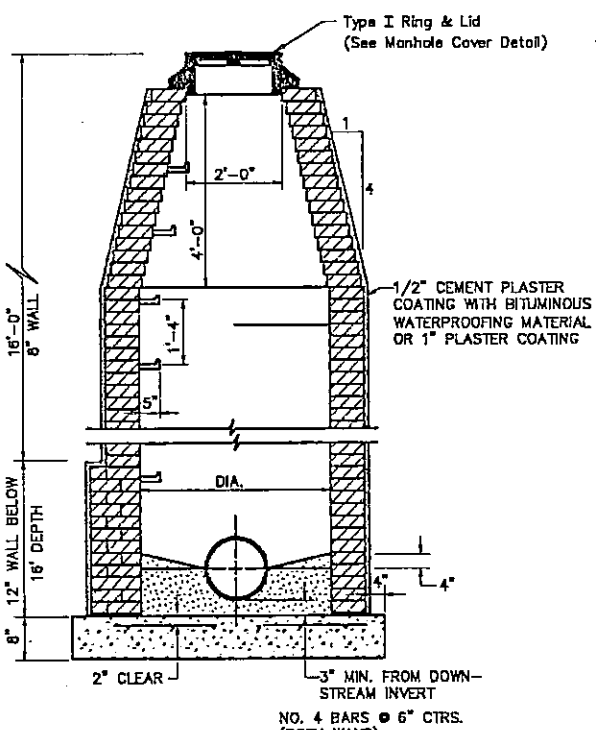

STANDARD BRICK MANHOLE (DEEP TYPE)

GENERAL NOTES

1. The inside diameter of the manhole shall be 4'-0" for pipe diameters from 12" thru 24", 5'-0" for pipe diameter from 27" thru 36" and 6'-0" for pipes diameter 42" thru 48". All manhole bases (pre-cast or poured-in-place) shall have No. 4 reinforcing bars placed on 12" centers both ways.
2. Standard cast iron manhole steps to be Clay & Bailey Manufacturing Co. No. 2102 or approved equal. Steel core, plastic coated steps may be used (M.A. Ind., Inc. No. PS1-PF, PS2-PF, or approved equal).
3. Reinforcement in all sections shall equal or exceed A.S.T.M. C-478 specifications.
4. Mastic material to be used at all sections joints. O-rings may be used for joints below the cone section, but the cone section itself shall not have O-ring joints.
5. Approved gasket or concrete mortar to be used around pipe in knock-outs.

BALDWIN CITY, KANSAS	
PRECAST & BRICK MANHOLE	
DATE: 4-7-94	SH. OF
DRAWN:	APPVD: RAW

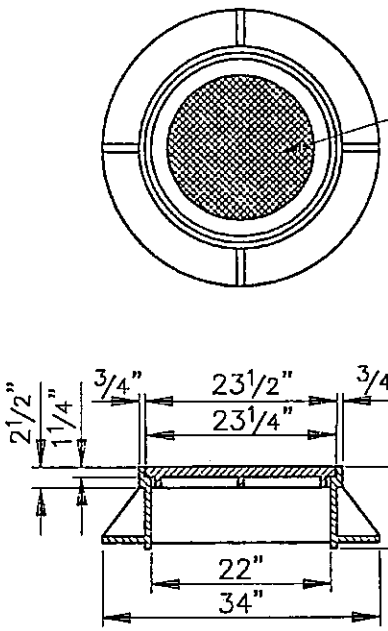

TYPE I RING AND LID

Clay & Bailey #2008, Deeter # 1315, or approved equal.

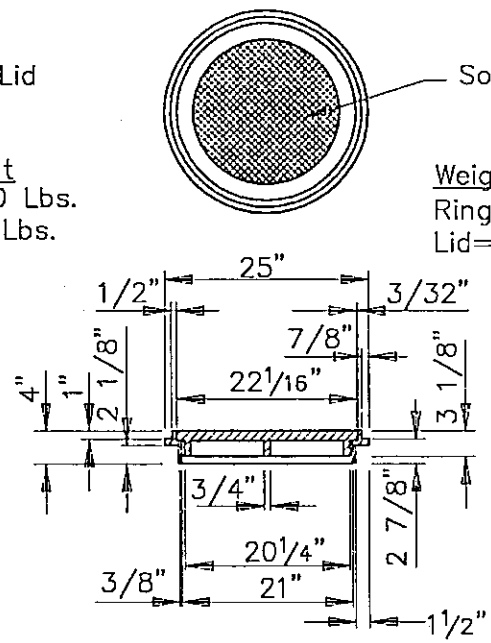

TYPE II RING AND LID

Clay & Bailey #2020, Deeter # 2016, or approved equal.

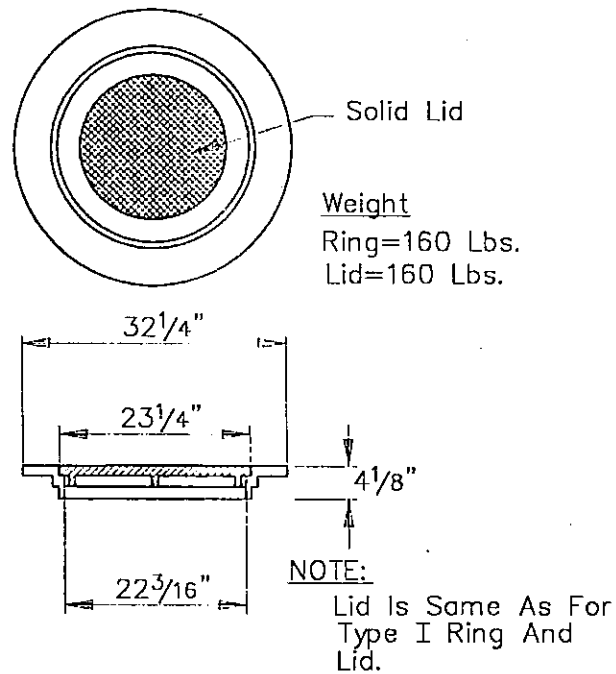

TYPE III RING AND LID

Clay & Bailey #2023 Ring & #2008BV Lid, Deeter #1330 Ring & #1315 Lid, or approved equal.

BALDWIN CITY, KANSAS	
MANHOLE RING AND LID	
DATE: 4-7-94	SH. OF
DRAWN:	APPVD: RAW

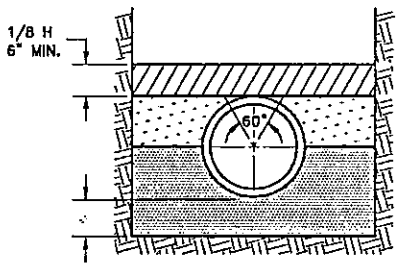

FIRST CLASS BEDDING
CLASS B

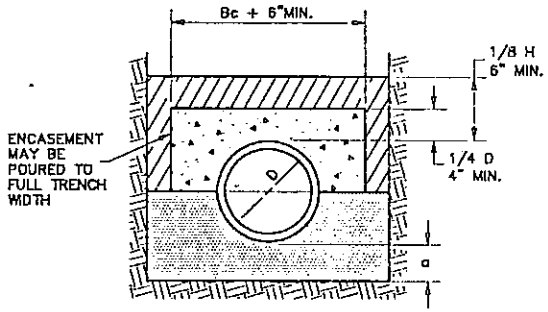

ARCH ENCASEMENT
CLASS A

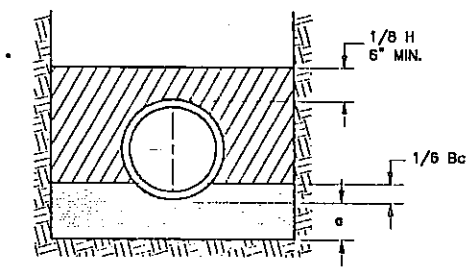

ORDINARY BEDDING
CLASS C

NOTES:

1. GRANULAR FILL TO BE CRUSHED STONE OR PEA GRAVEL WITH NOT LESS THAN 95% PASSING 1/2" AND NOT LESS THAN 95% TO BE RETAINED ON A #4; TO BE PLACED IN NOT MORE THAN 6" LAYERS AND COMPACTED BY SLICING WITH A SHOVEL.
2. TAMPED BACKFILL SHALL BE FINELY DIVIDED JOB EXCAVATED MATERIAL FREE FROM DEBRIS, ORGANIC MATERIAL, AND STONES, COMPACTED TO 95% MAXIMUM DENSITY AS DETERMINED BY AASHTO STANDARD, METHOD T-99. GRANULAR FILL MAY BE SUBSTITUTED FOR ALL OR PART OF TAMPED BACKFILL.
3. HAND-PLACED BACKFILL SHALL BE FINELY DIVIDED MATERIAL FREE FROM DEBRIS AND STONE.

LEGEND

Bc = OUTSIDE DIAMETER OF PIPE
H = BACKFILL COVER ABOVE TOP OF PIPE
D = NOMINAL PIPE SIZE
a = FILL BELOW PIPE(SEE TABLE)

= HAND PLACED BACKFILL

= TAMPED BACKFILL

= GRANULAR BACKFILL

= CONCRETE

TABLE OF FILL DEPTHS BELOW PIPE

D	"a" MIN. IN. SOIL	"a" MIN. IN. ROCK
27" & SMALLER	3"	6"
30" TO 60"	4"	9"
66" & LARGER	6"	12"

PIPE SIZE (INCHES)	MINIMUM TRENCH WIDTH (INCHES)	MINIMUM SIDE WALL CLEARANCE (INCHES)
12	30	6
15	30	6
18	35	6
21	39	6.5
24	44	7
27	49	8
30	54	8.5
33	58	9
36	64	10
42	73	11
48	83	12.5
54	92	13.5
60	102	15
66	109	15
72	117	15.5
78	124	15.5
84	132	16
90	139	16.5
96	147	17
102	154	17.5
108	162	18

STORM SEWER TRENCHING

BALDWIN CITY, KANSAS

STORM SEWER TRENCHING

DATE: 4-7-94 SH. OF
DRAWN: APPVD: RAW